8. 3 级维修

8-1. 框图

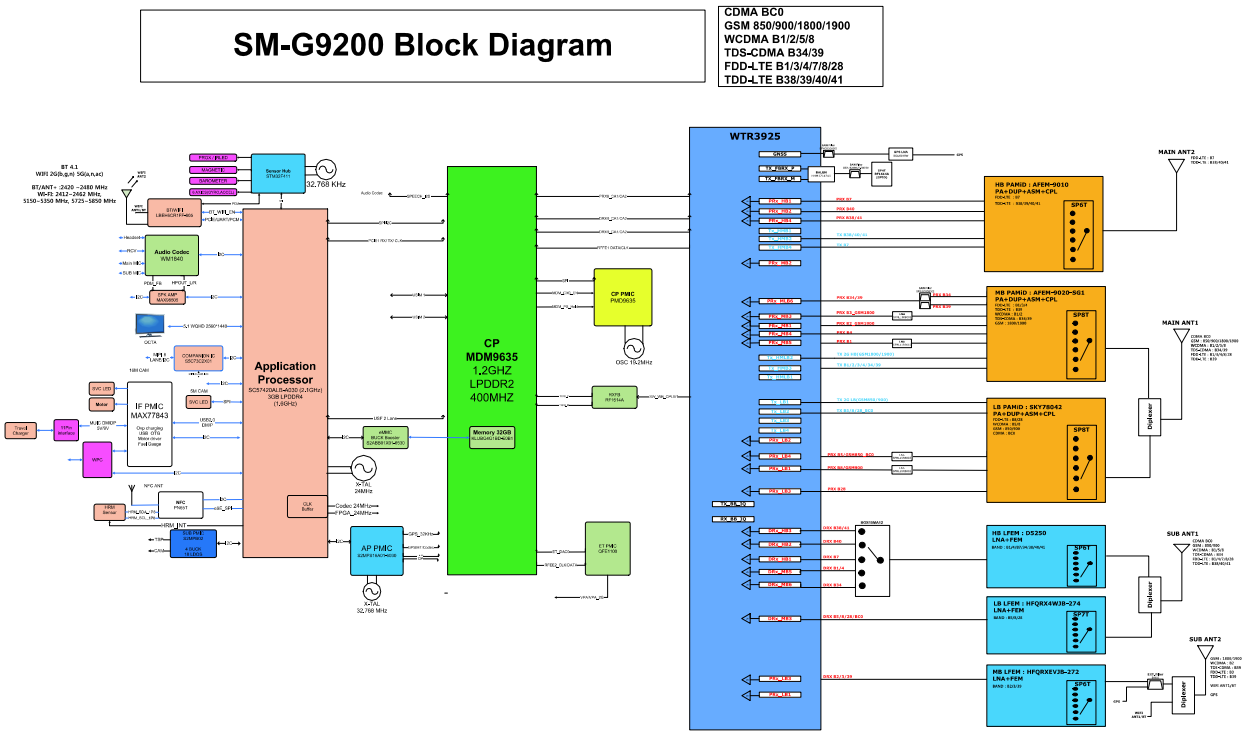

保密和所有权-本维修手册内容的变更恕不另行通知。
未经三星书面授权而发布，传送，或违背本文件中的任何内容或数据是严格禁止的。

8-2. PCB 图解

8-2-1. 顶部

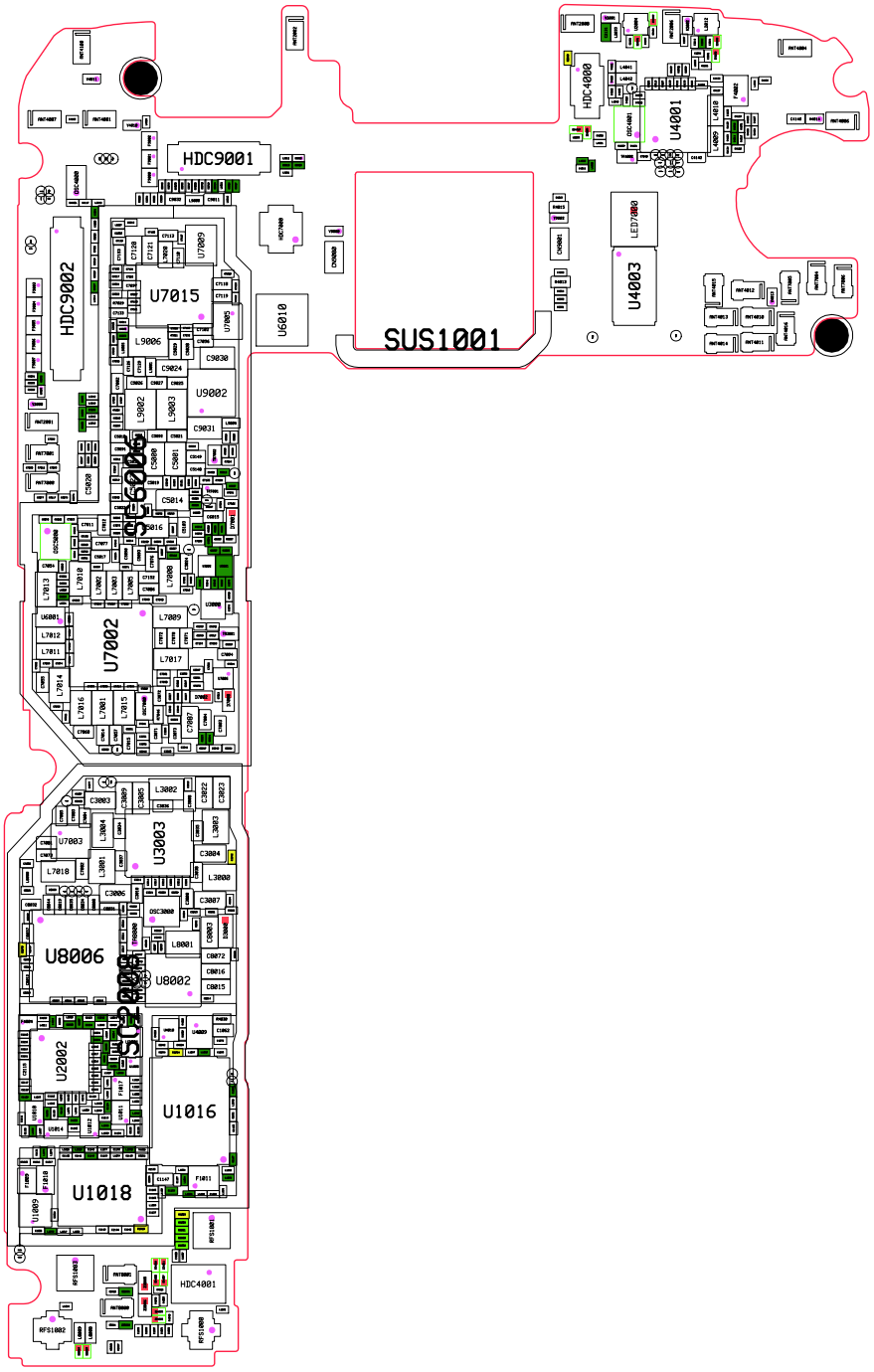

保密和所有权-本维修手册内容的变更恕不另行通知。
未经三星书面授权而发布，传送，或违背本文件中的任何内容或数据是严格禁止的。

8-2-2. 底部

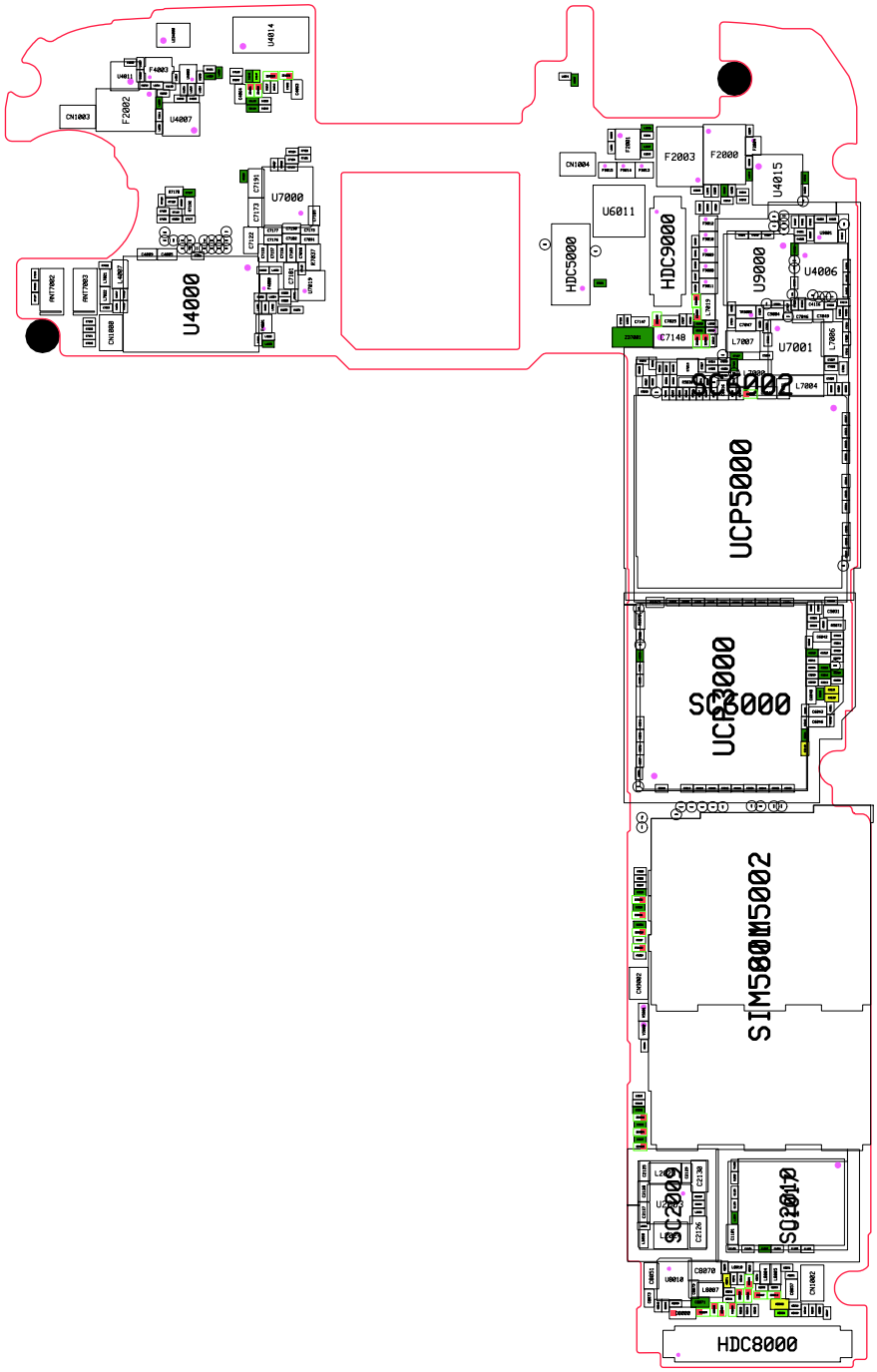

保密和所有权-本维修手册内容的变更恕不另行通知。
未经三星书面授权而发布，传送，或违背本文件中的任何内容或数据是严格禁止的。

8-2-3. 副 PBA 顶部

保密和所有权-本维修手册内容的变更恕不另行通知。
未经三星书面授权而发布，传送，或违背本文件中的任何内容或数据是严格禁止的。

8-2-3. 副 PBA 底部

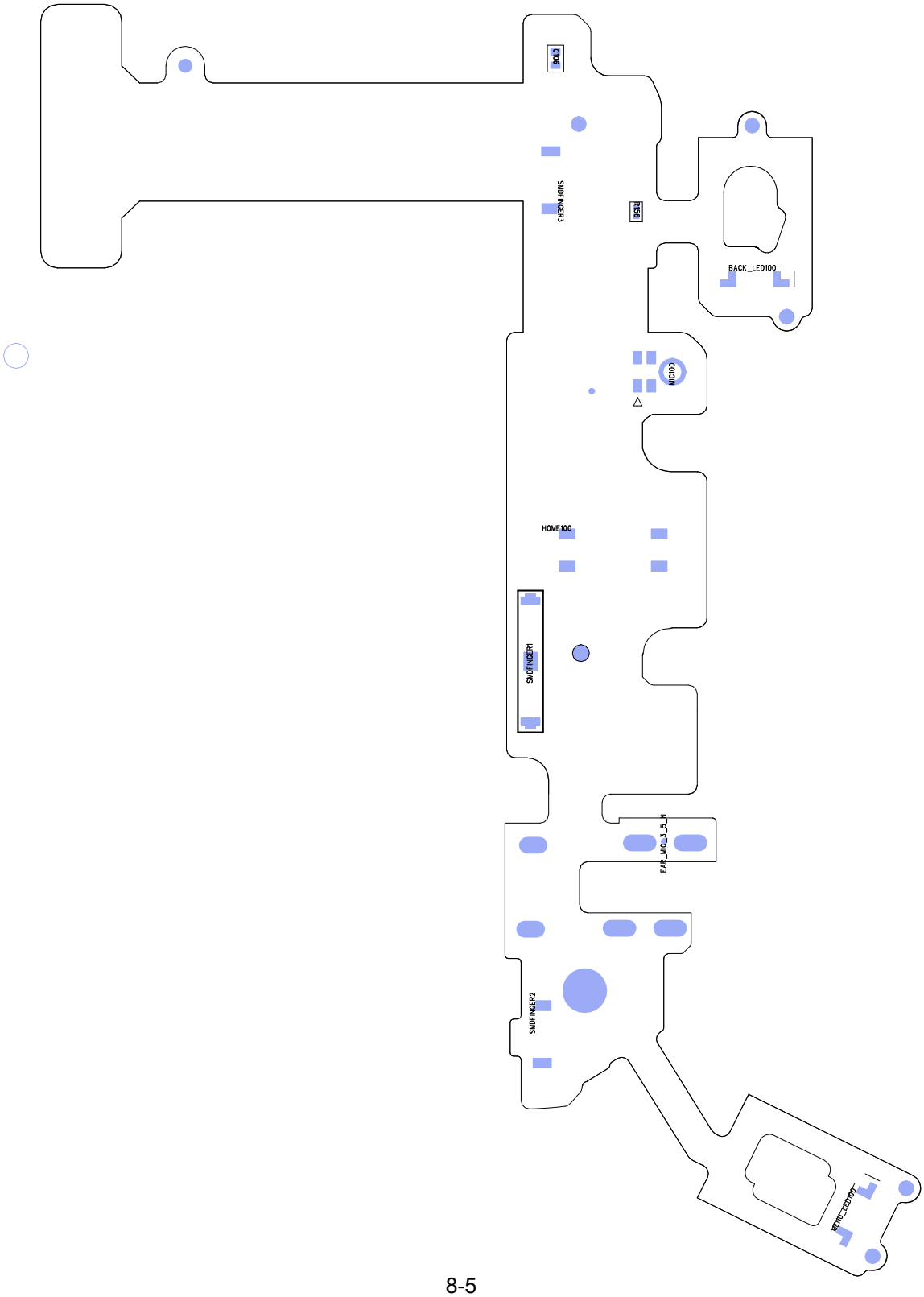

保密和所有权-本维修手册内容的变更恕不另行通知。
未经三星书面授权而发布，传送，或违背本文件中的任何内容或数据是严格禁止的。

8-3. 故障排除流程图

设备

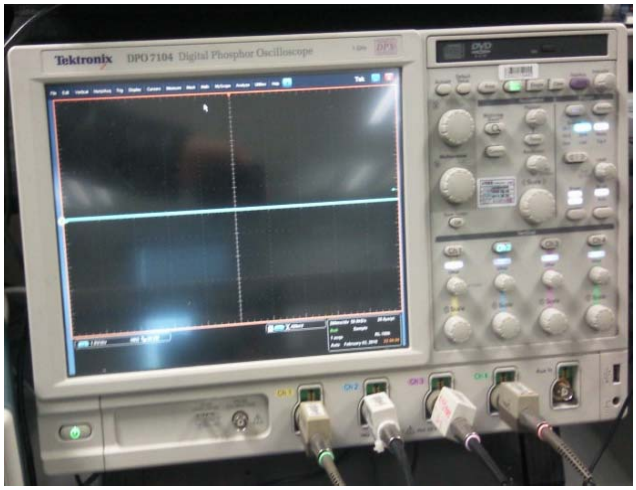

↑示波器

↑数字万用表

↑电源供电器

↑+字螺丝刀，ESD 安全镊子

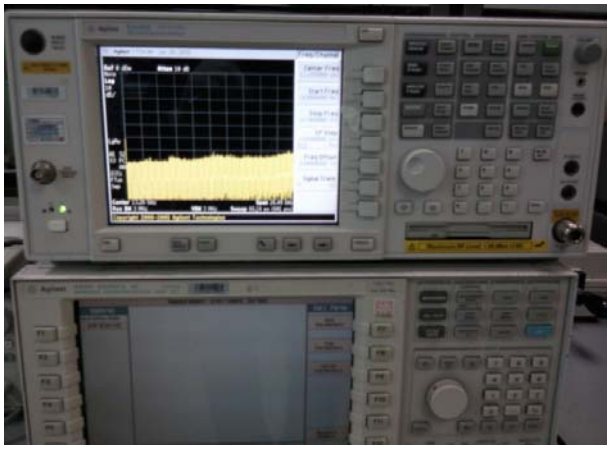

↑8960 和频谱仪

↑焊接烙铁

保密和所有权-本维修手册内容的变更恕不另行通知。
未经三星书面授权而发布，传送，或违背本文件中的任何内容或数据是严格禁止的。

8-3-1.开机

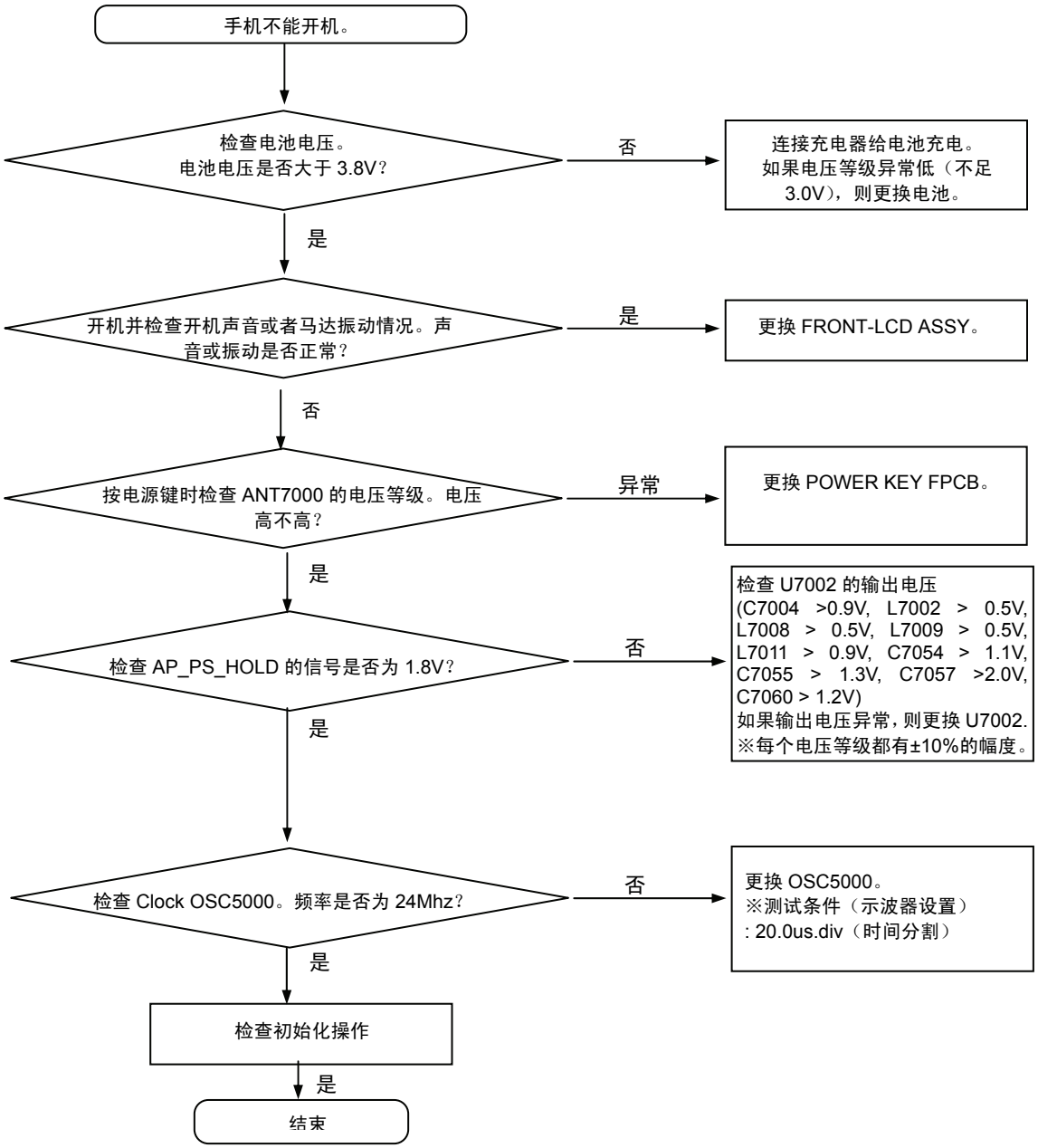

保密和所有权-本维修手册内容的变更恕不另行通知。
未经三星书面授权而发布，传送，或违背本文件中的任何内容或数据是严格禁止的。

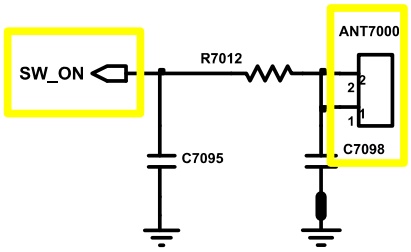

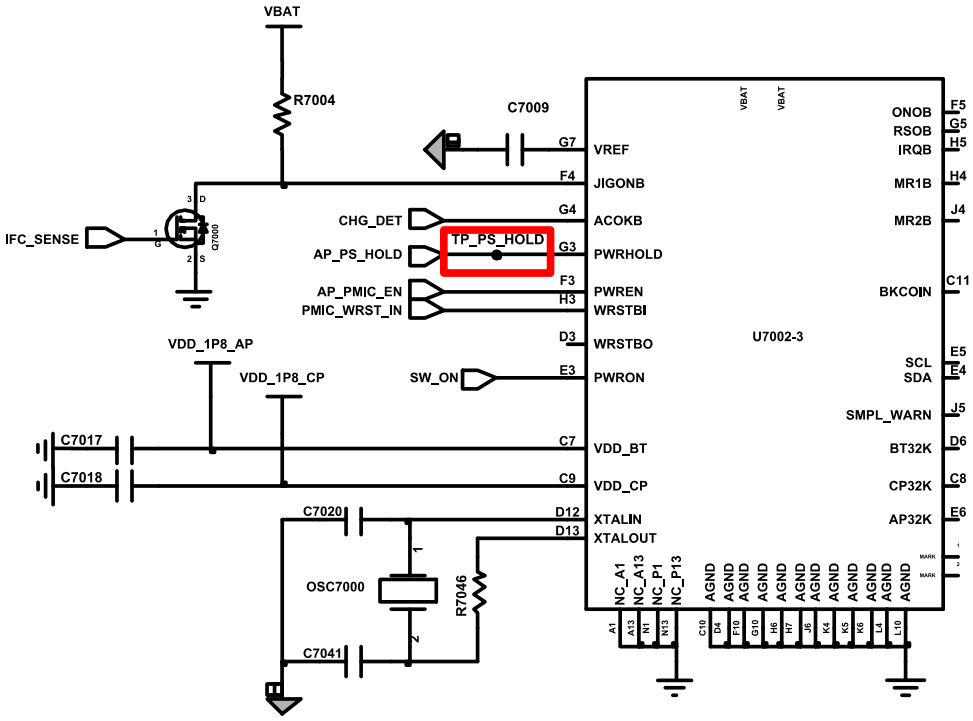

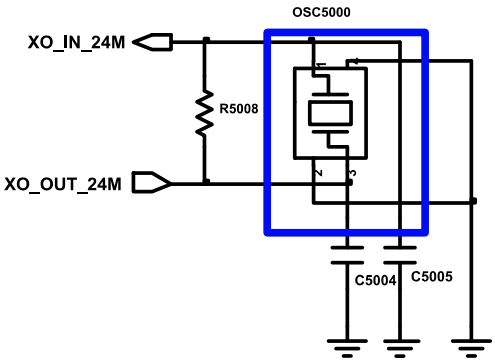

Confidential and proprietary-the contents in this service guide subject to change without prior notice.
Distribution, transmission, or infringement of any content or data from this document without Samsung's written authorization is strictly prohibited.

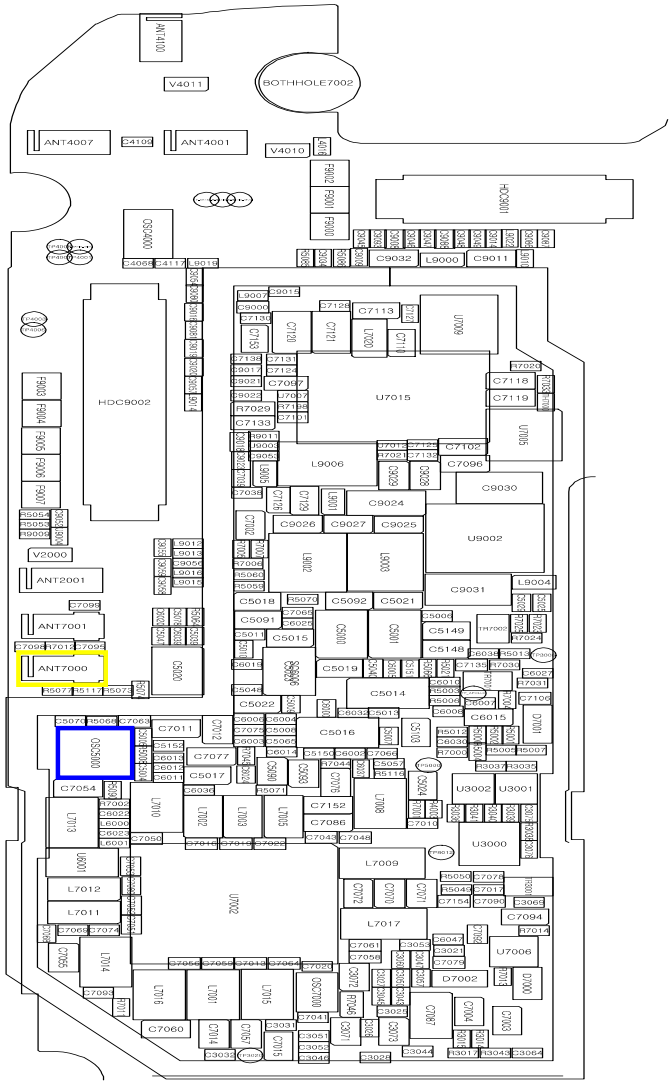

Confidential and proprietary-the contents in this service guide subject to change without prior notice.
Distribution, transmission, or infringement of any content or data from this document without Samsung's written authorization is strictly prohibited.

8-3-2 初始化

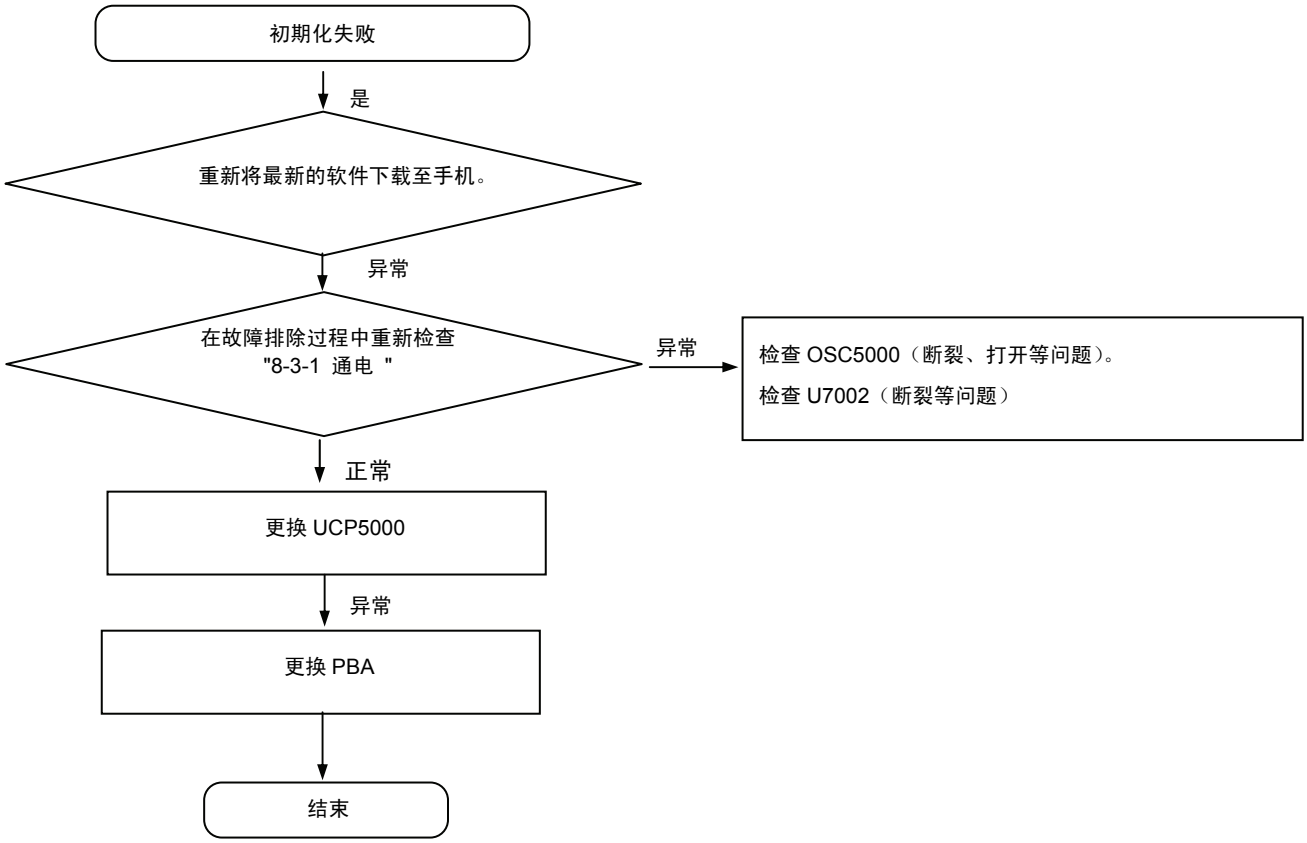

保密和所有权-本维修手册内容的变更恕不另行通知。
未经三星书面授权而发布，传送，或违背本文件中的任何内容或数据是严格禁止的。

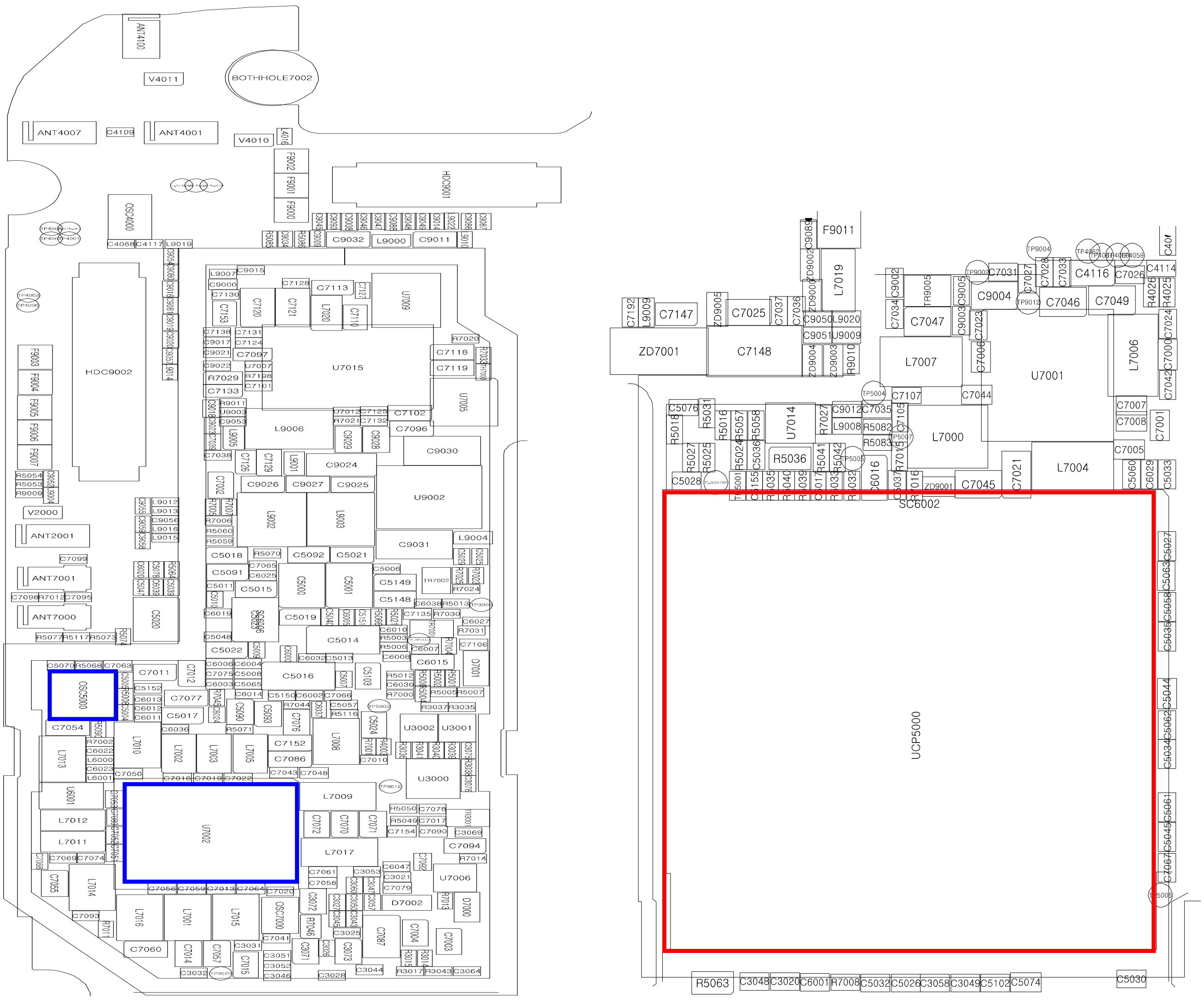

Confidential and proprietary-the contents in this service guide subject to change without prior notice.
Distribution, transmission, or infringement of any content or data from this document without Samsung's written authorization is strictly prohibited.

8-3-3. 无服务

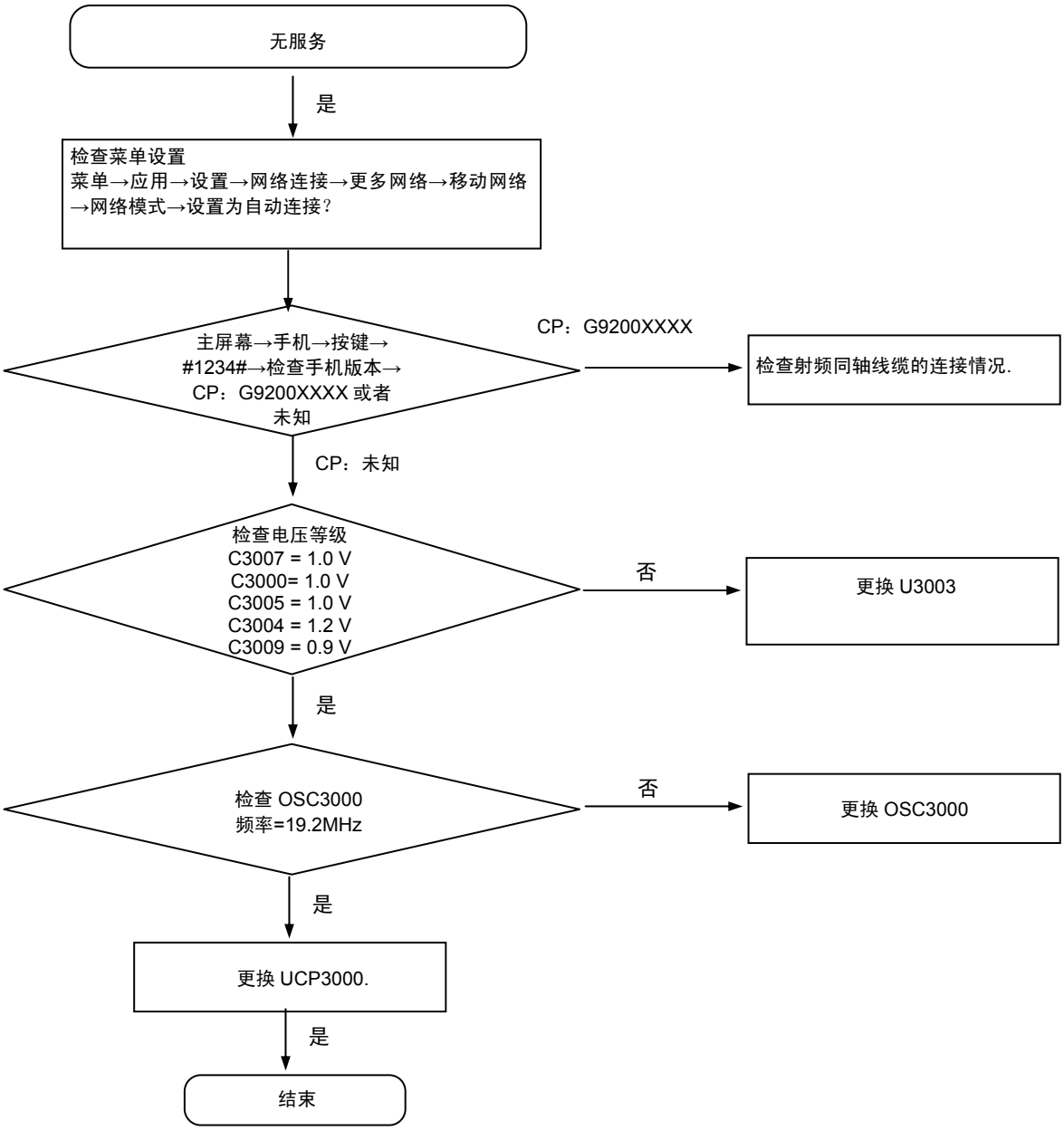

保密和所有权-本维修手册内容的变更恕不另行通知。
未经三星书面授权而发布，传送，或违背本文件中的任何内容或数据是严格禁止的。

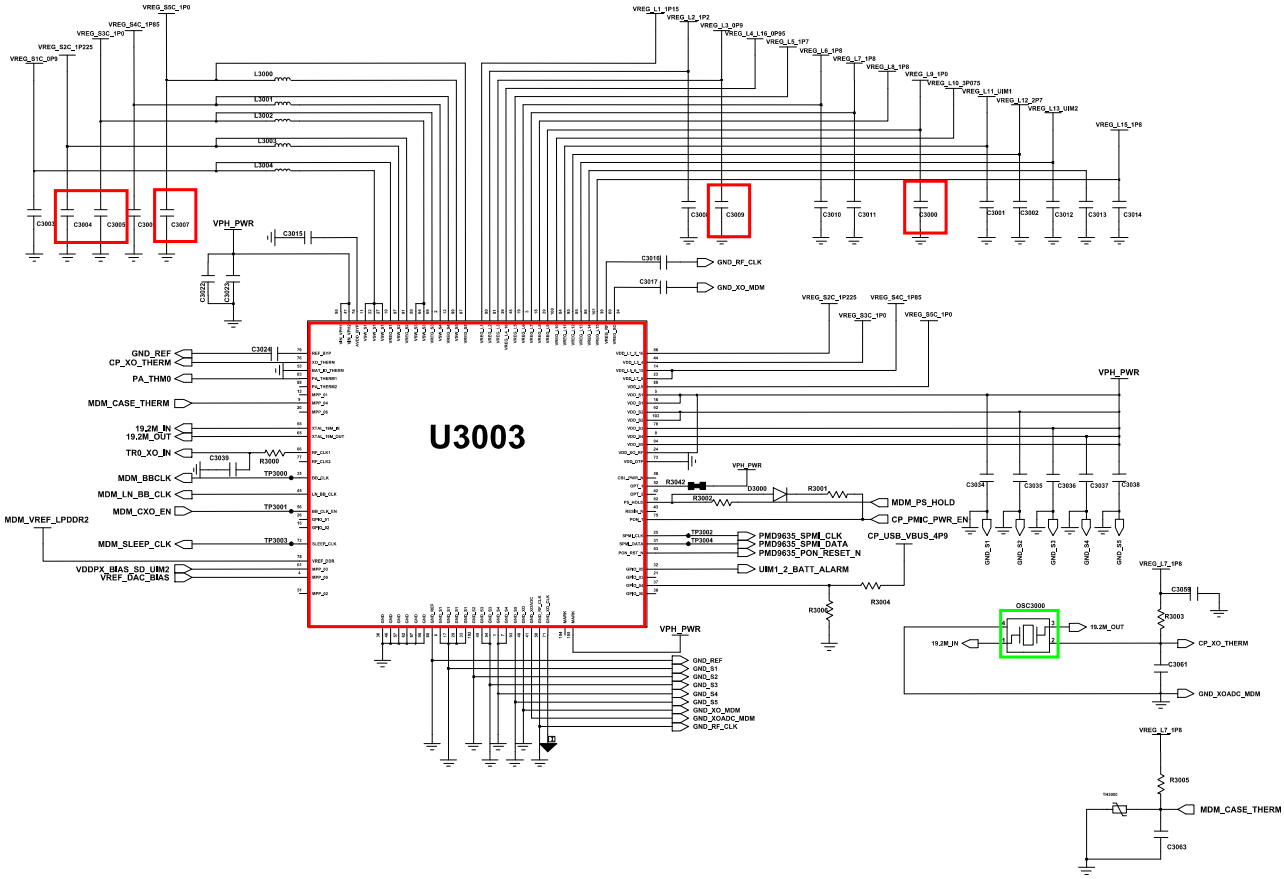

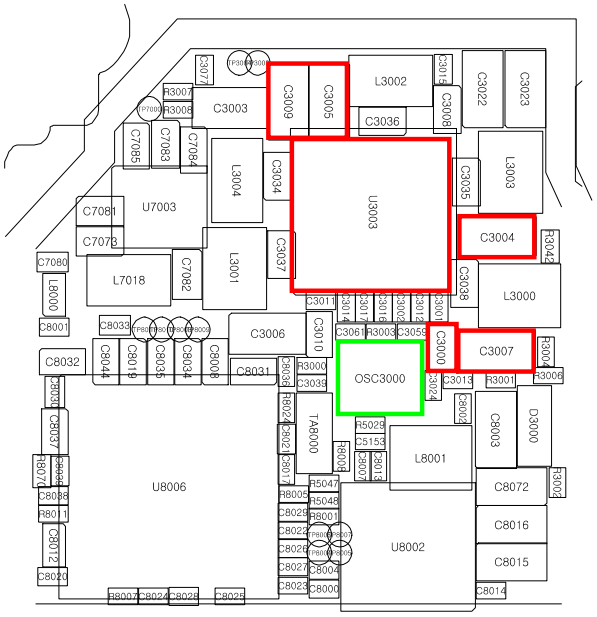

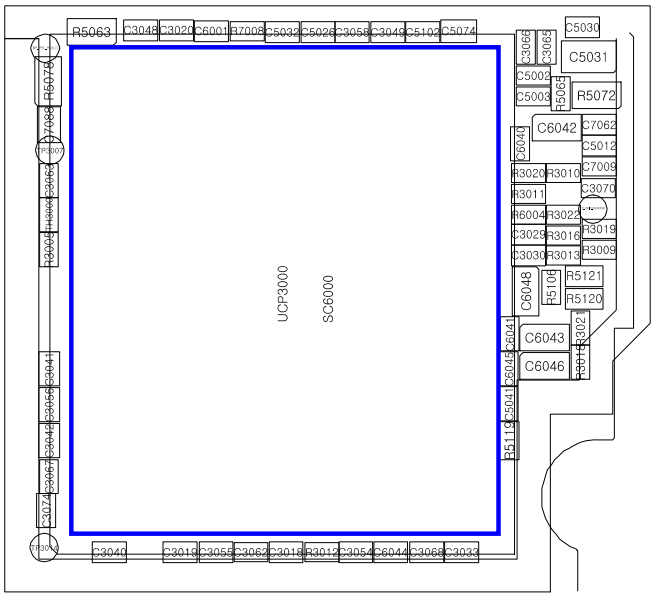

Confidential and proprietary-the contents in this service guide subject to change without prior notice.
Distribution, transmission, or infringement of any content or data from this document without Samsung's written authorization is strictly prohibited.

8-3-4. Sim 部分

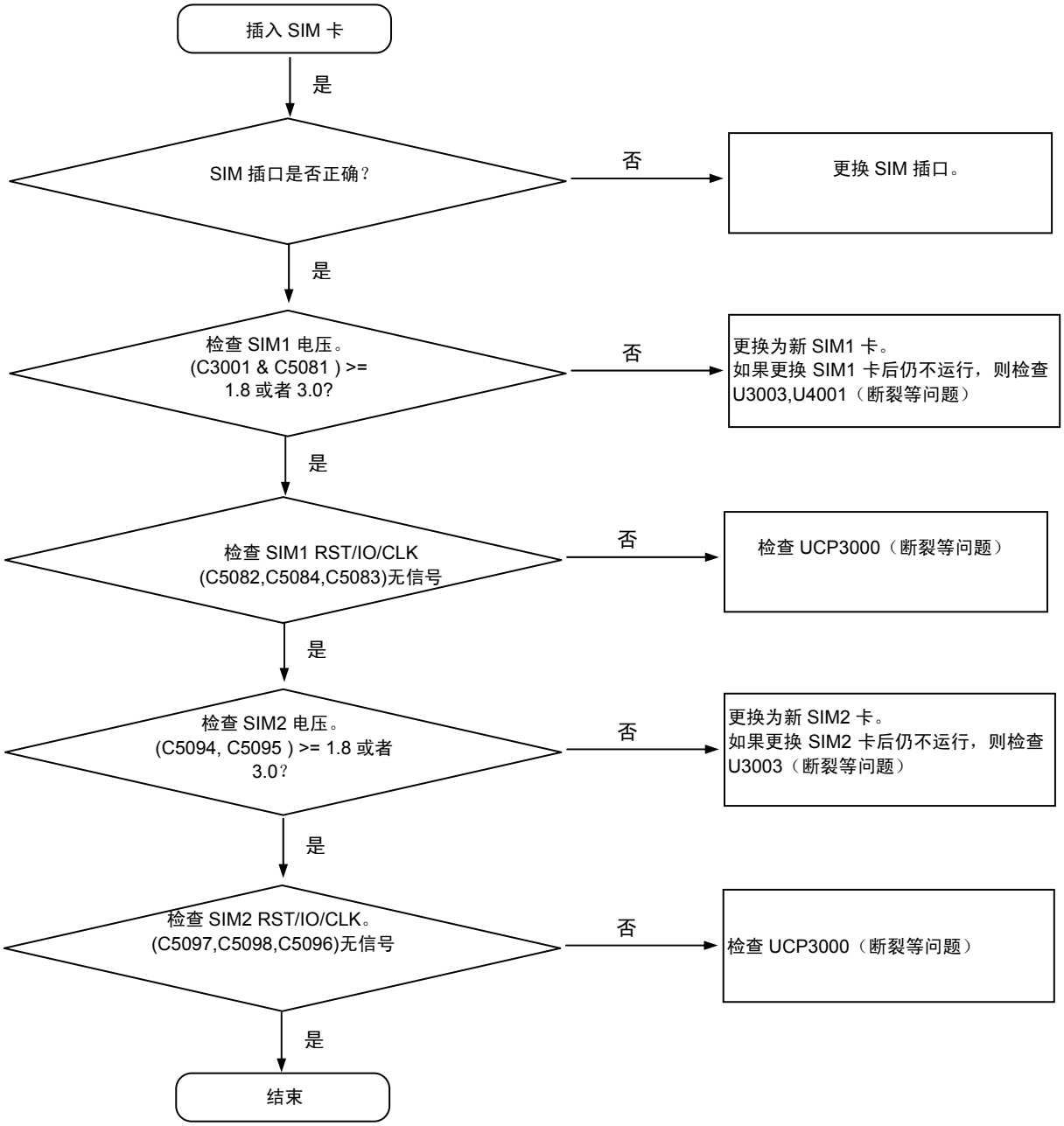

保密和所有权-本维修手册内容的变更恕不另行通知。
未经三星书面授权而发布，传送，或违背本文件中的任何内容或数据是严格禁止的。

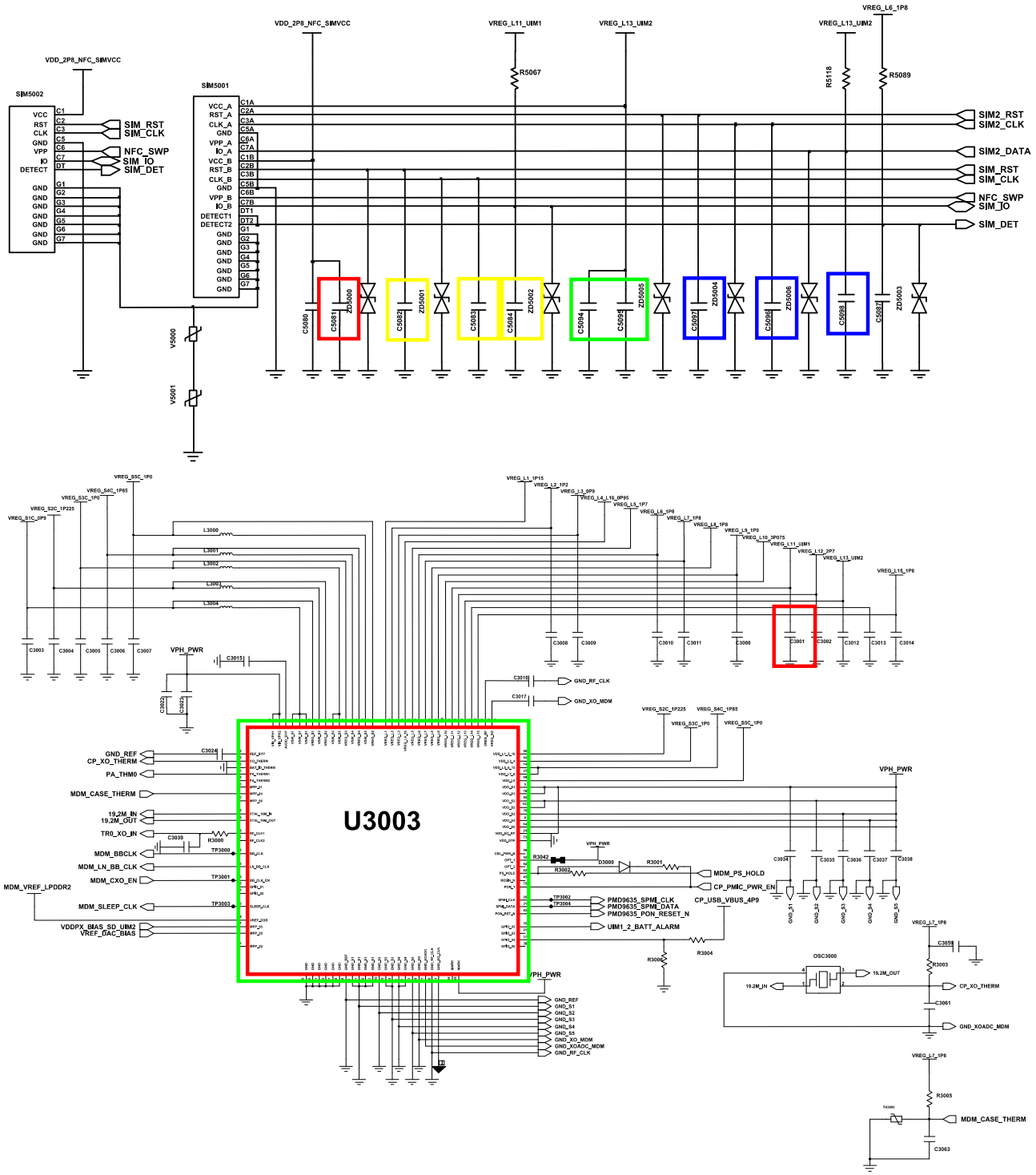

Confidential and proprietary-the contents in this service guide subject to change without prior notice.
Distribution, transmission, or infringement of any content or data from this document without Samsung's written authorization is strictly prohibited.

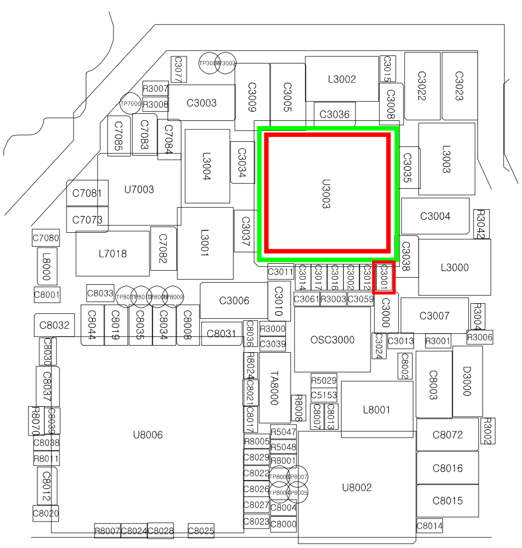

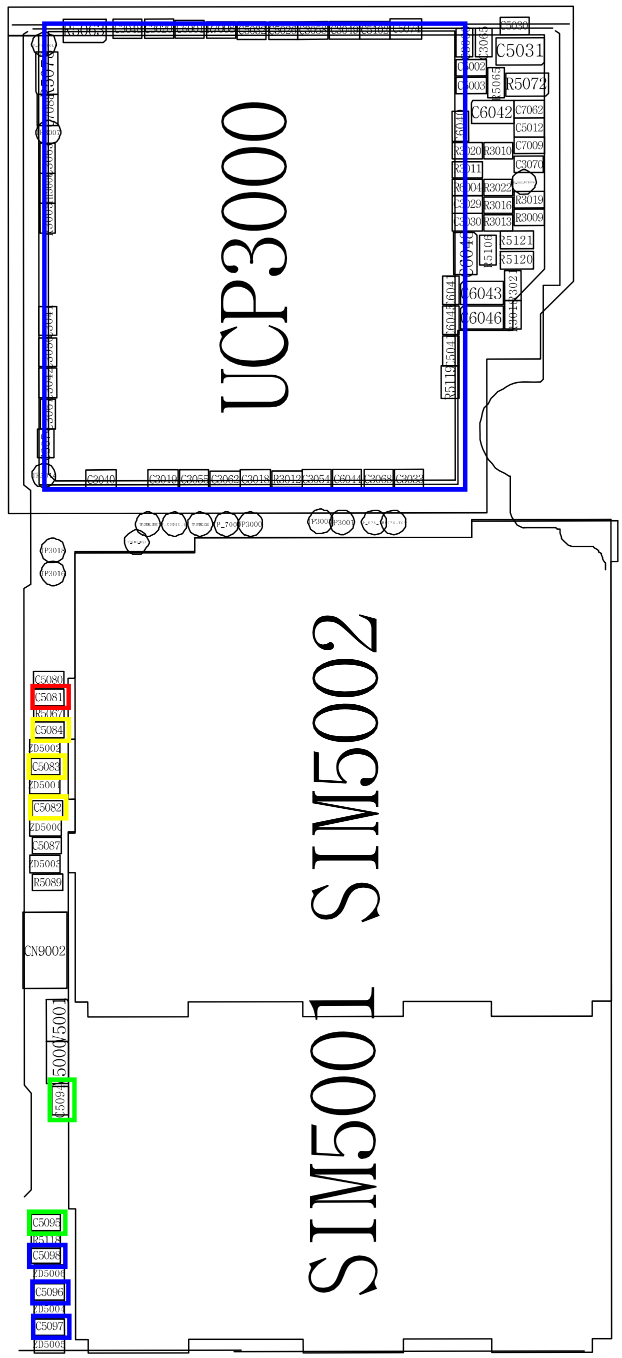

Confidential and proprietary-the contents in this service guide subject to change without prior notice.
Distribution, transmission, or infringement of any content or data from this document without Samsung's written authorization is strictly prohibited.

8-3-5. 充电部分

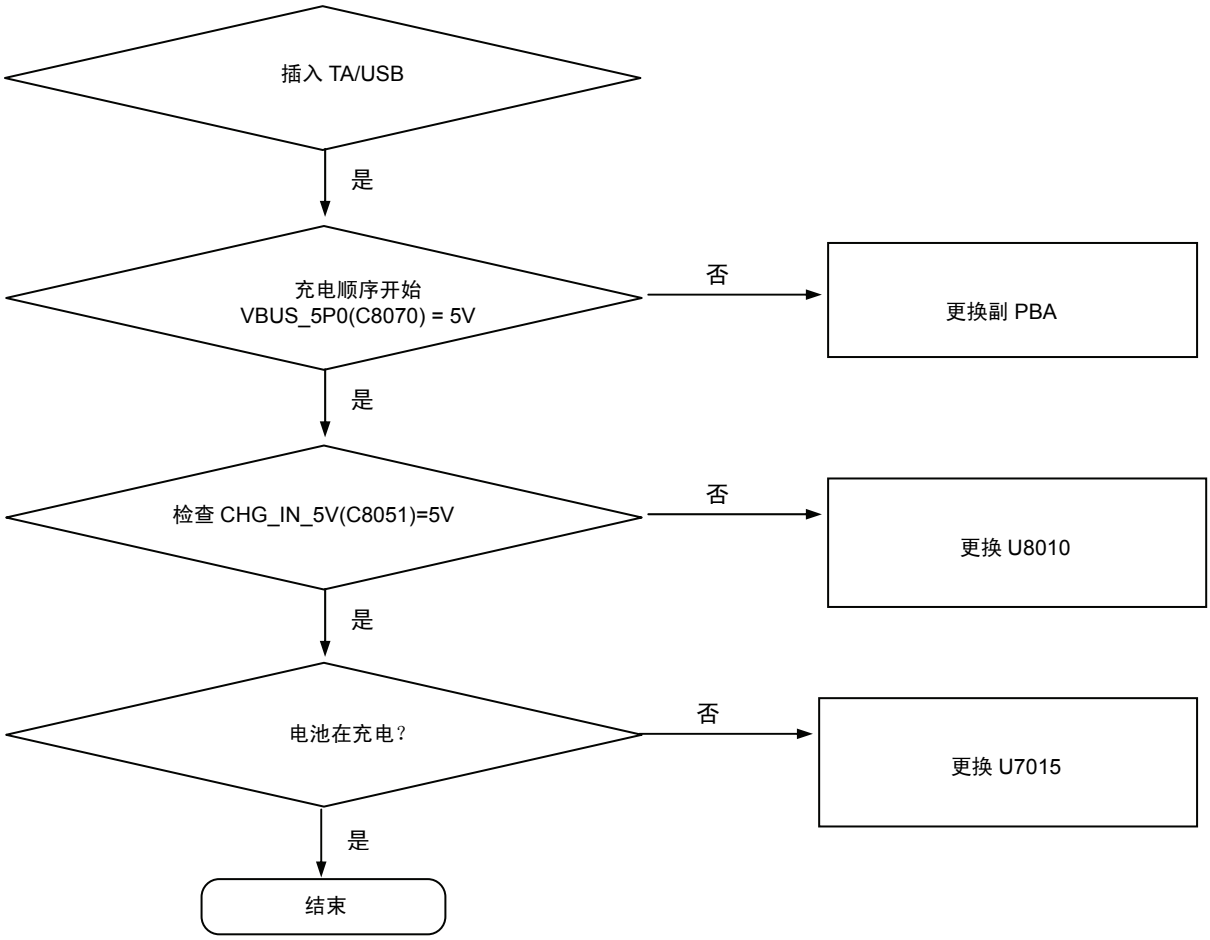

保密和所有权-本维修手册内容的变更恕不另行通知。
未经三星书面授权而发布，传送，或违背本文件中的任何内容或数据是严格禁止的。

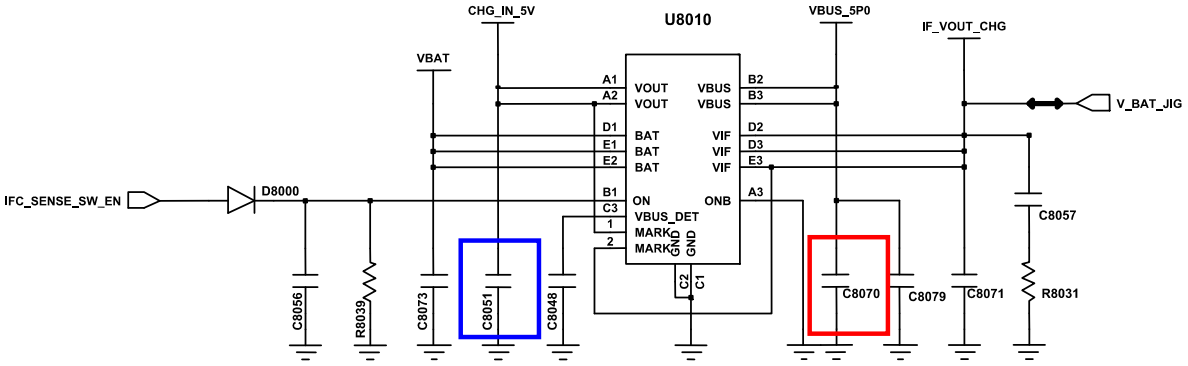

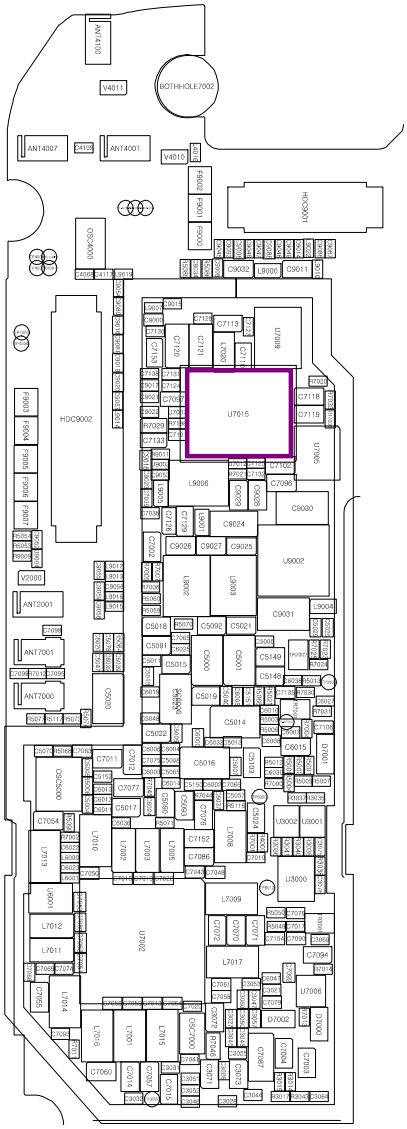

Confidential and proprietary-the contents in this service guide subject to change without prior notice.
Distribution, transmission, or infringement of any content or data from this document without Samsung's written authorization is strictly prohibited.

8-3-6. OTG

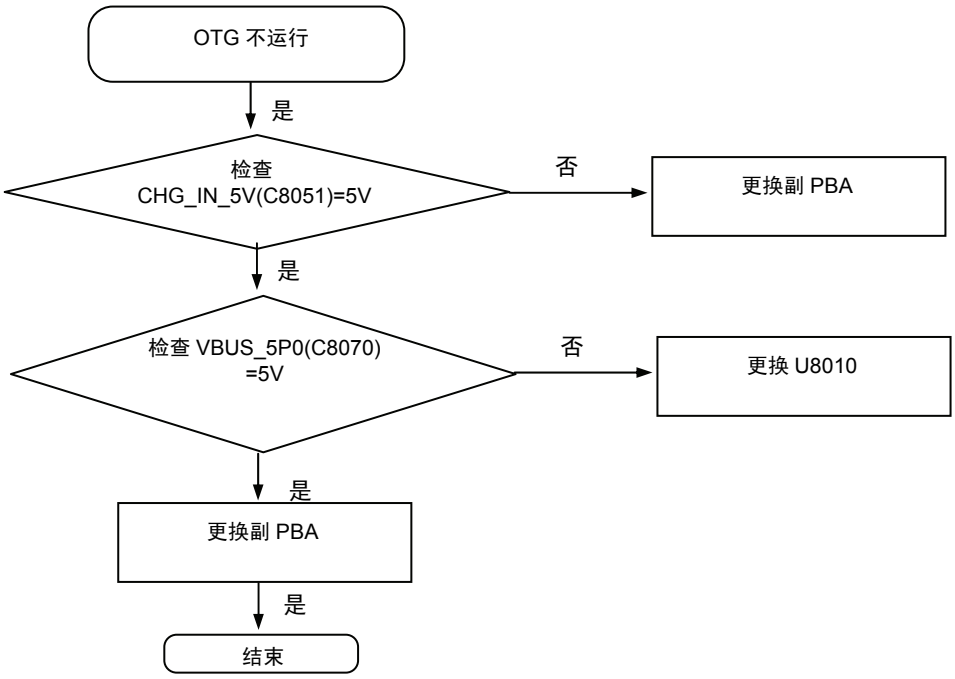

保密和所有权-本维修手册内容的变更恕不另行通知。
未经三星书面授权而发布，传送，或违背本文件中的任何内容或数据是严格禁止的。

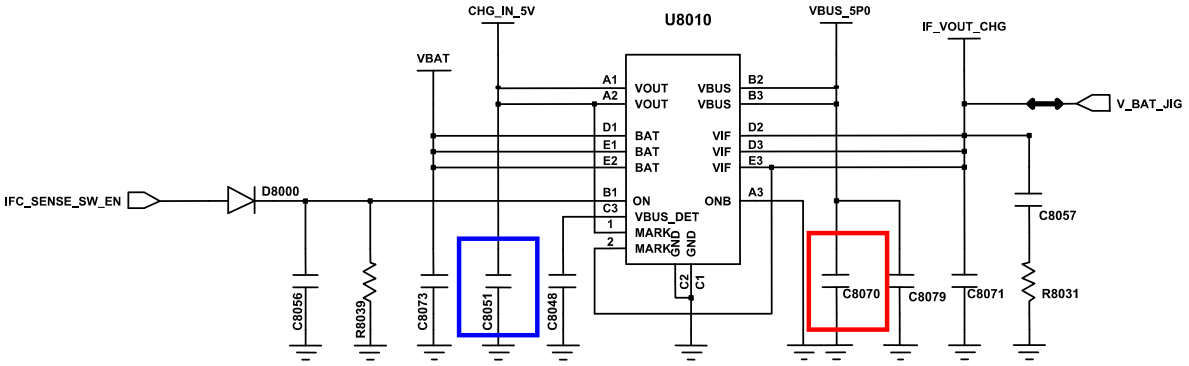

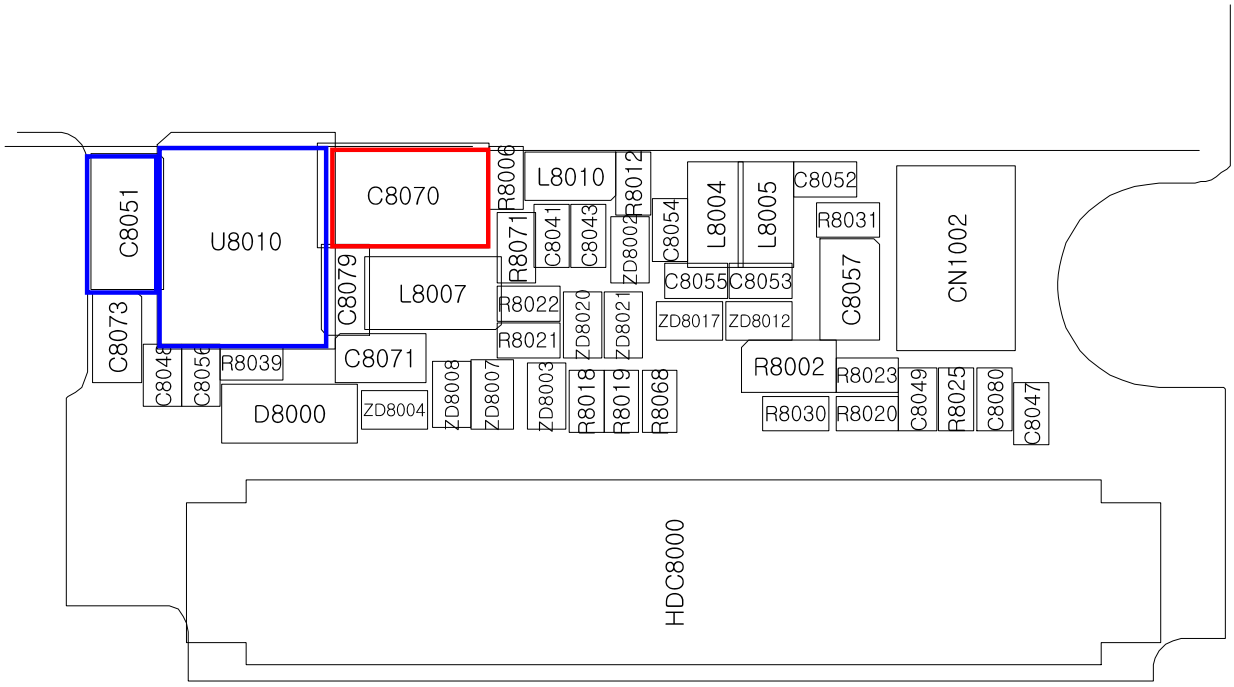

保密和所有权-本维修手册内容的变更恕不另行通知。
未经三星书面授权而发布，传送，或违背本文件中的任何内容或数据是严格禁止的。

8-3-7. 传感器中枢

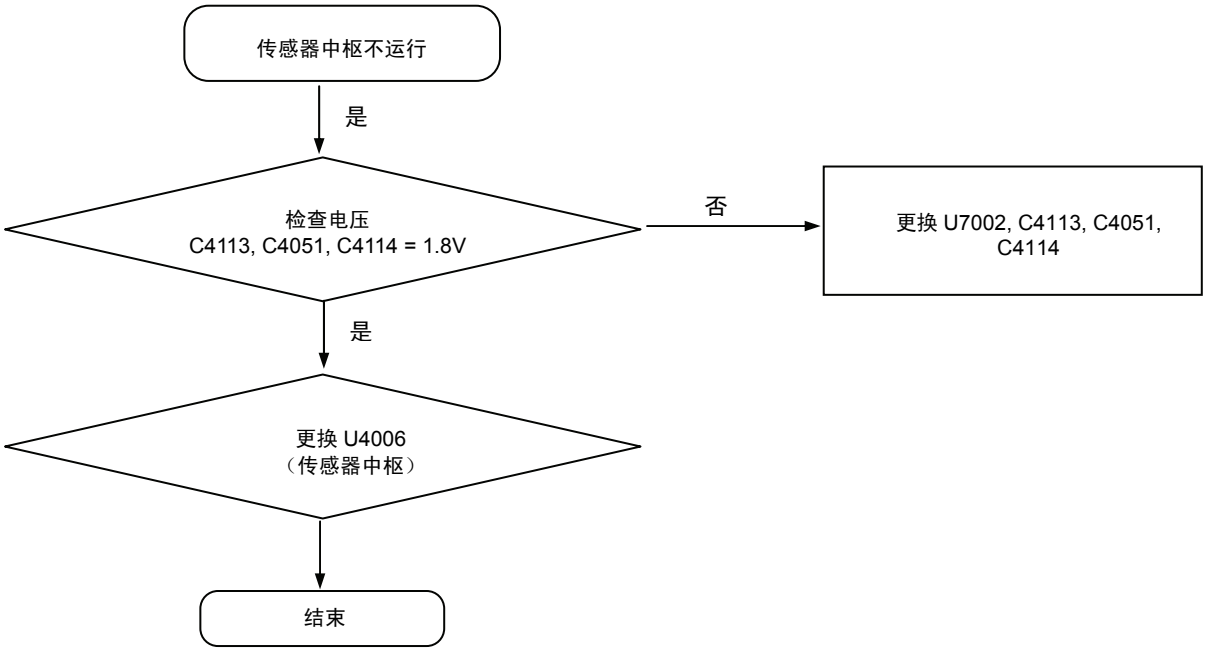

保密和所有权-本维修手册内容的变更恕不另行通知。
未经三星书面授权而发布，传送，或违背本文件中的任何内容或数据是严格禁止的。

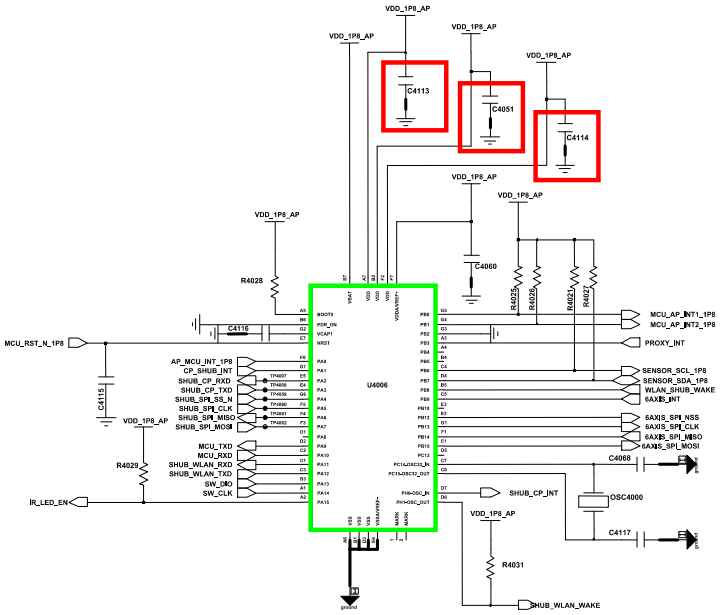

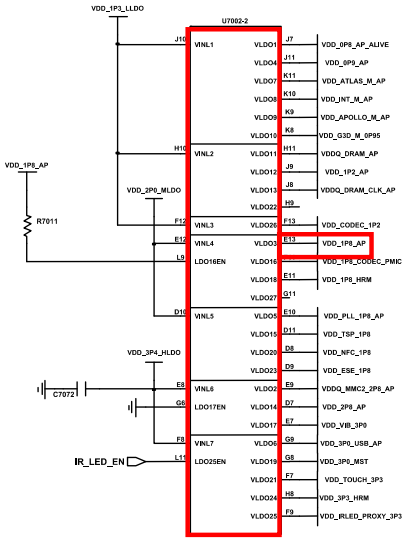

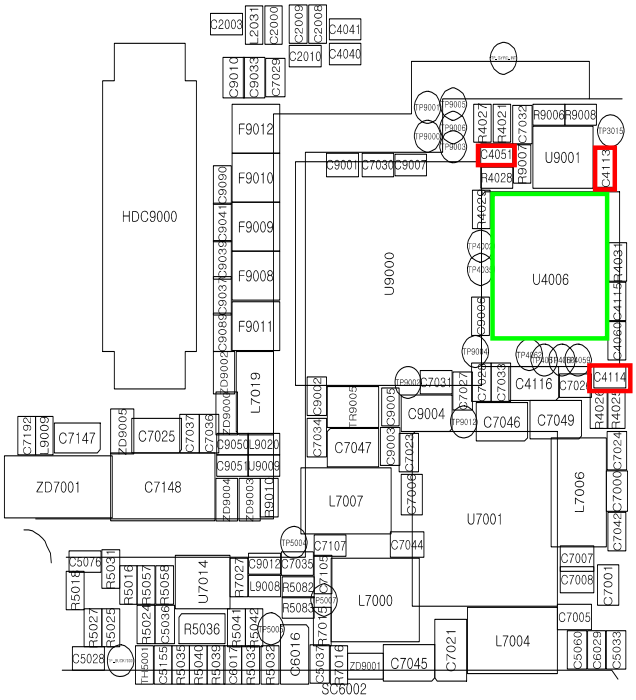

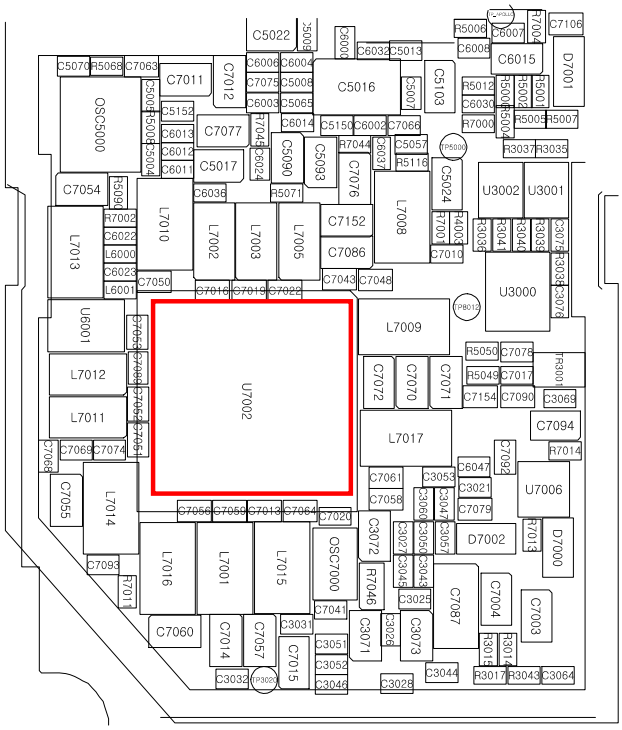

Confidential and proprietary-the contents in this service guide subject to change without prior notice.
Distribution, transmission, or infringement of any content or data from this document without Samsung's written authorization is strictly prohibited.

8-3-7-2. 磁传感器

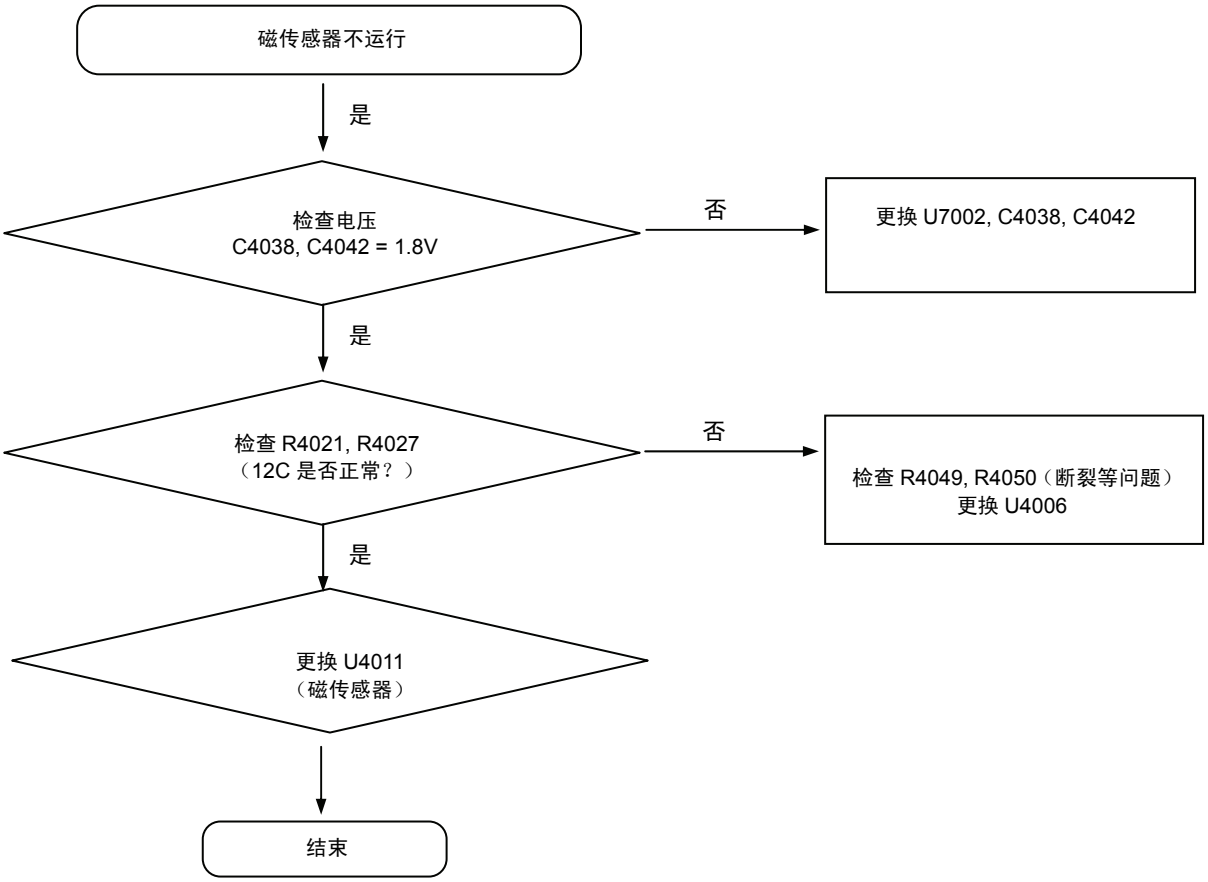

保密和所有权-本维修手册内容的变更恕不另行通知。
未经三星书面授权而发布，传送，或违背本文件中的任何内容或数据是严格禁止的。

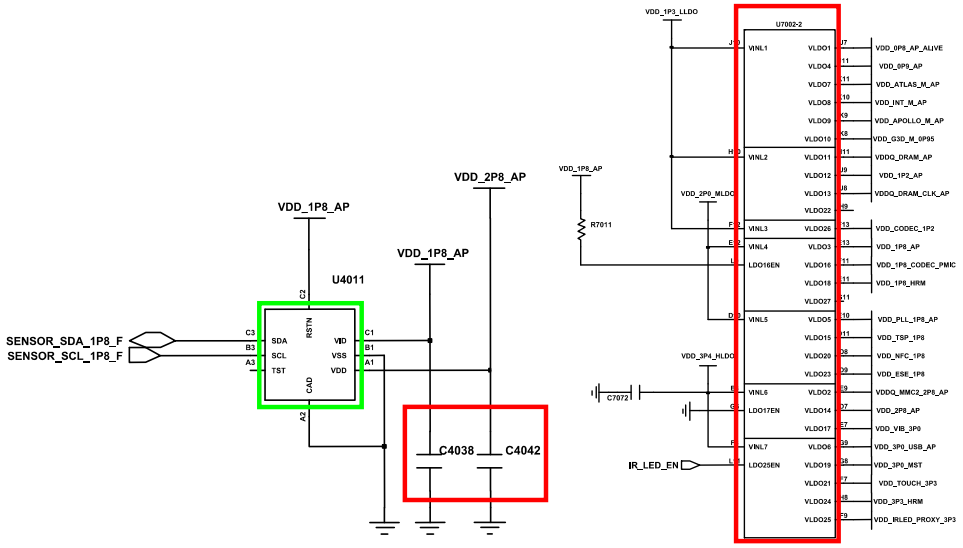

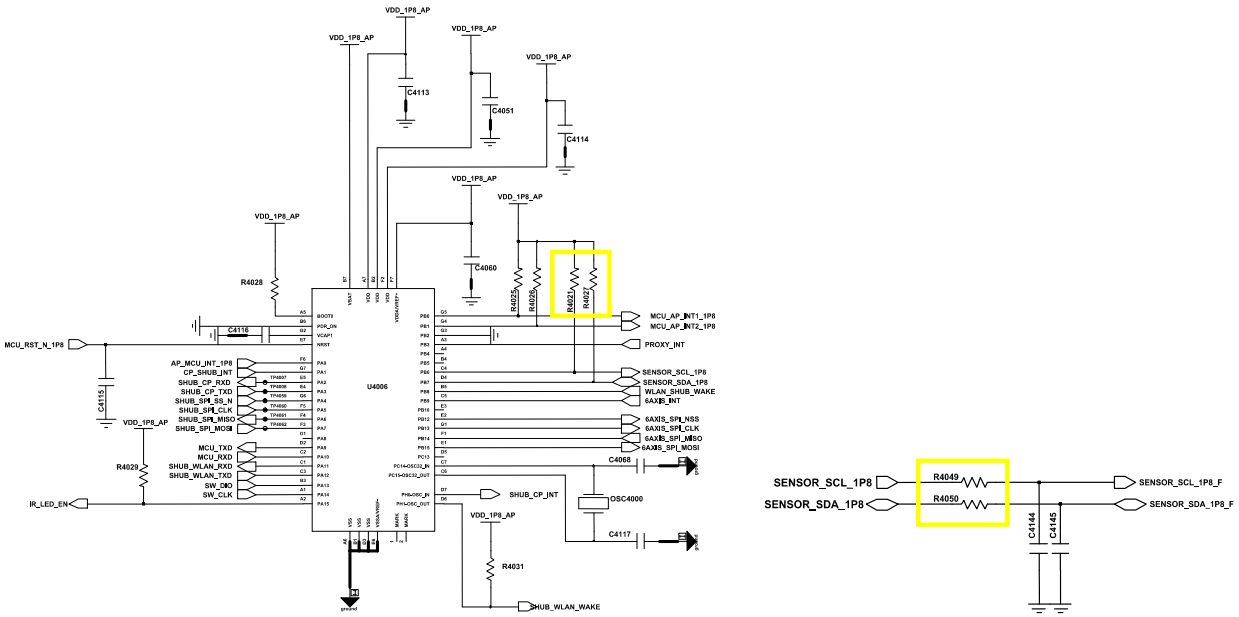

Confidential and proprietary-the contents in this service guide subject to change without prior notice.
Distribution, transmission, or infringement of any content or data from this document without Samsung's written authorization is strictly prohibited.

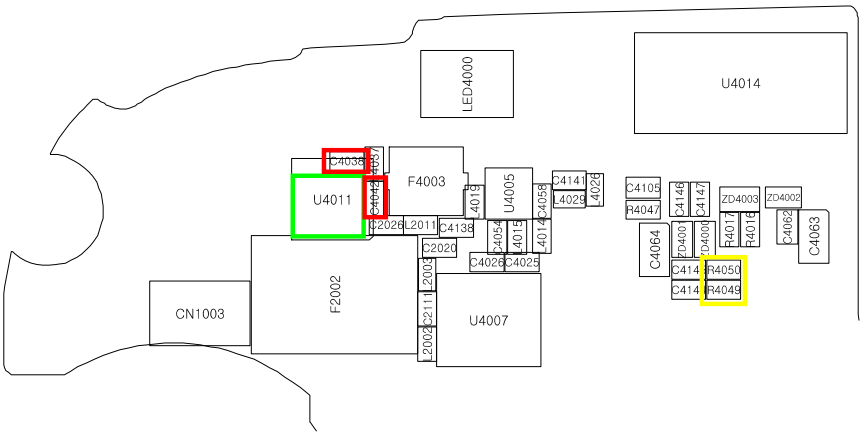

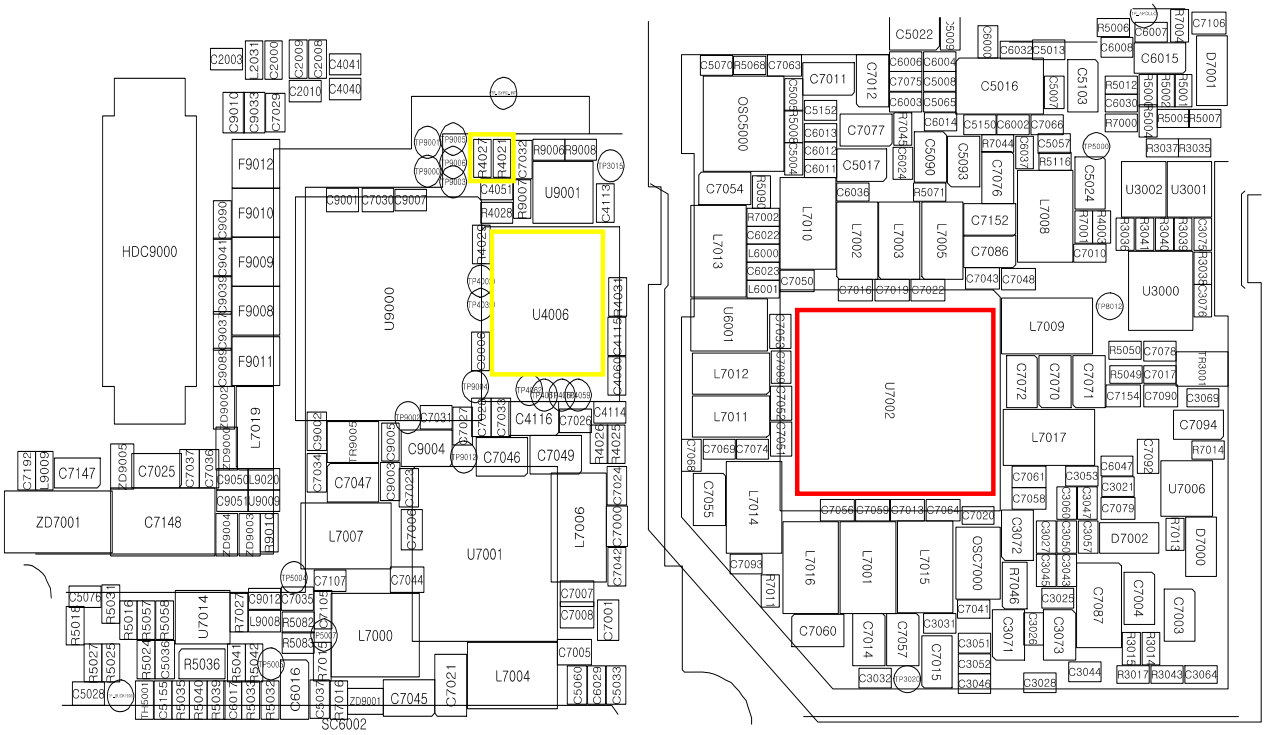

Confidential and proprietary-the contents in this service guide subject to change without prior notice.
Distribution, transmission, or infringement of any content or data from this document without Samsung's written authorization is strictly prohibited.

8-3-7-3. 6Axis 传感器

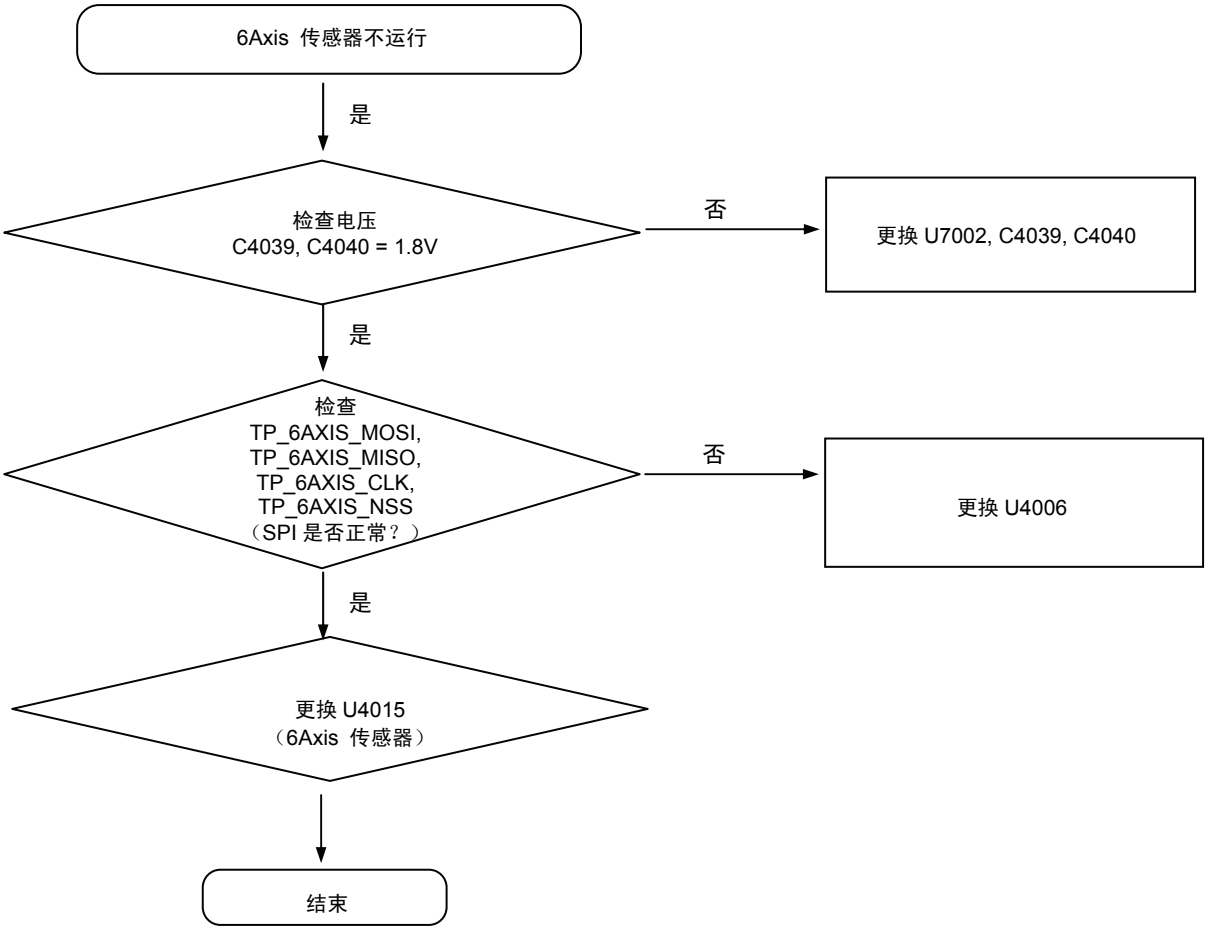

保密和所有权-本维修手册内容的变更恕不另行通知。
未经三星书面授权而发布，传送，或违背本文件中的任何内容或数据是严格禁止的。

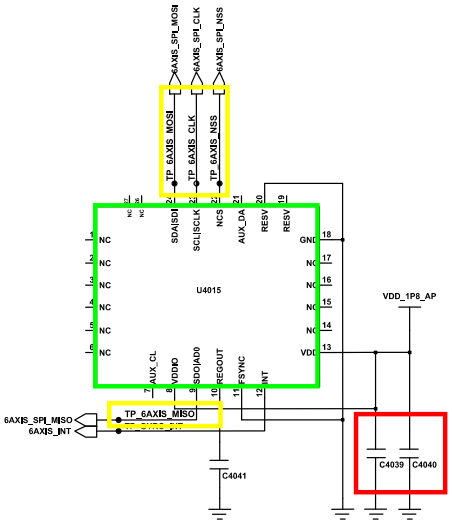

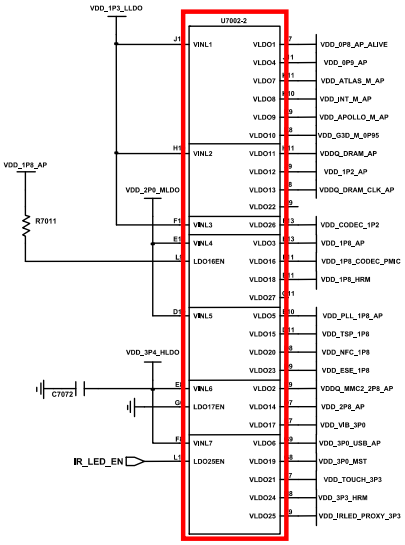

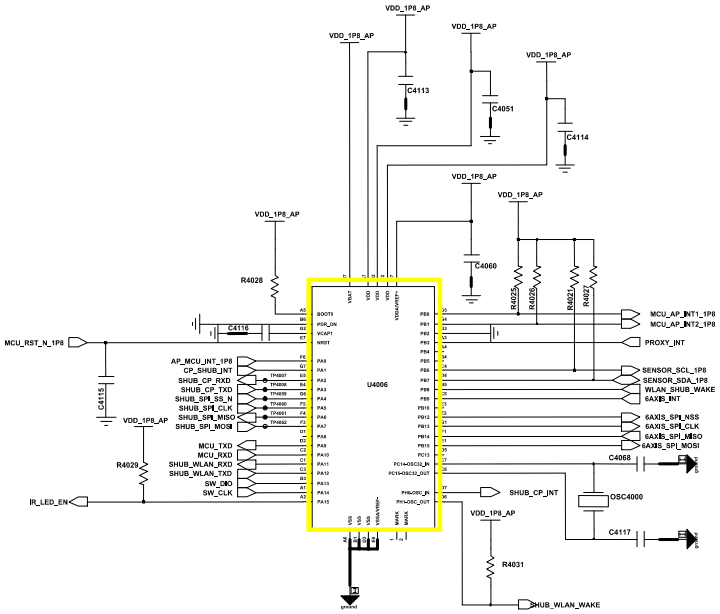

Confidential and proprietary-the contents in this service guide subject to change without prior notice.
Distribution, transmission, or infringement of any content or data from this document without Samsung's written authorization is strictly prohibited.

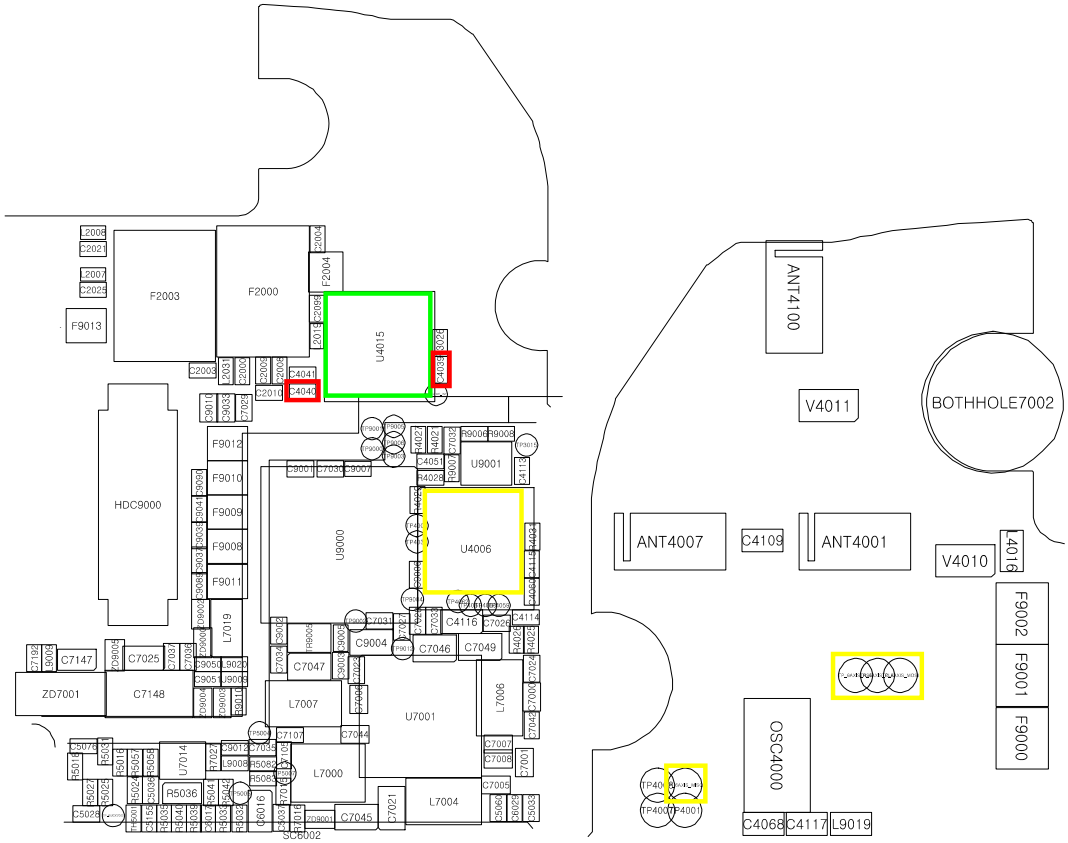

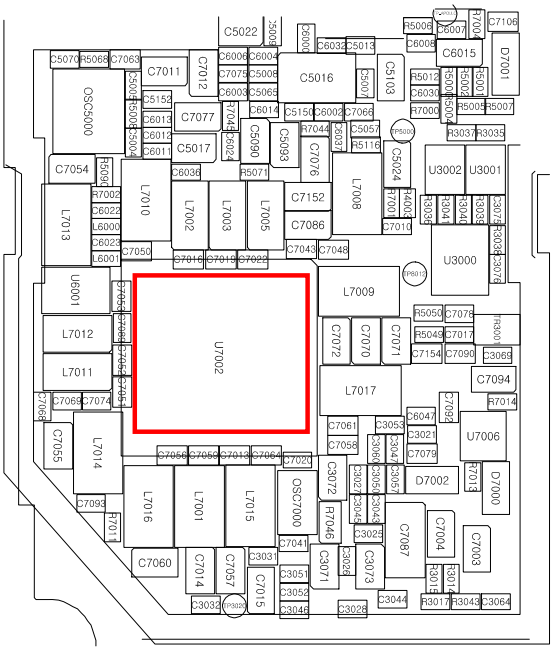

Confidential and proprietary-the contents in this service guide subject to change without prior notice.
Distribution, transmission, or infringement of any content or data from this document without Samsung's written authorization is strictly prohibited.

8-3-8. IRLED

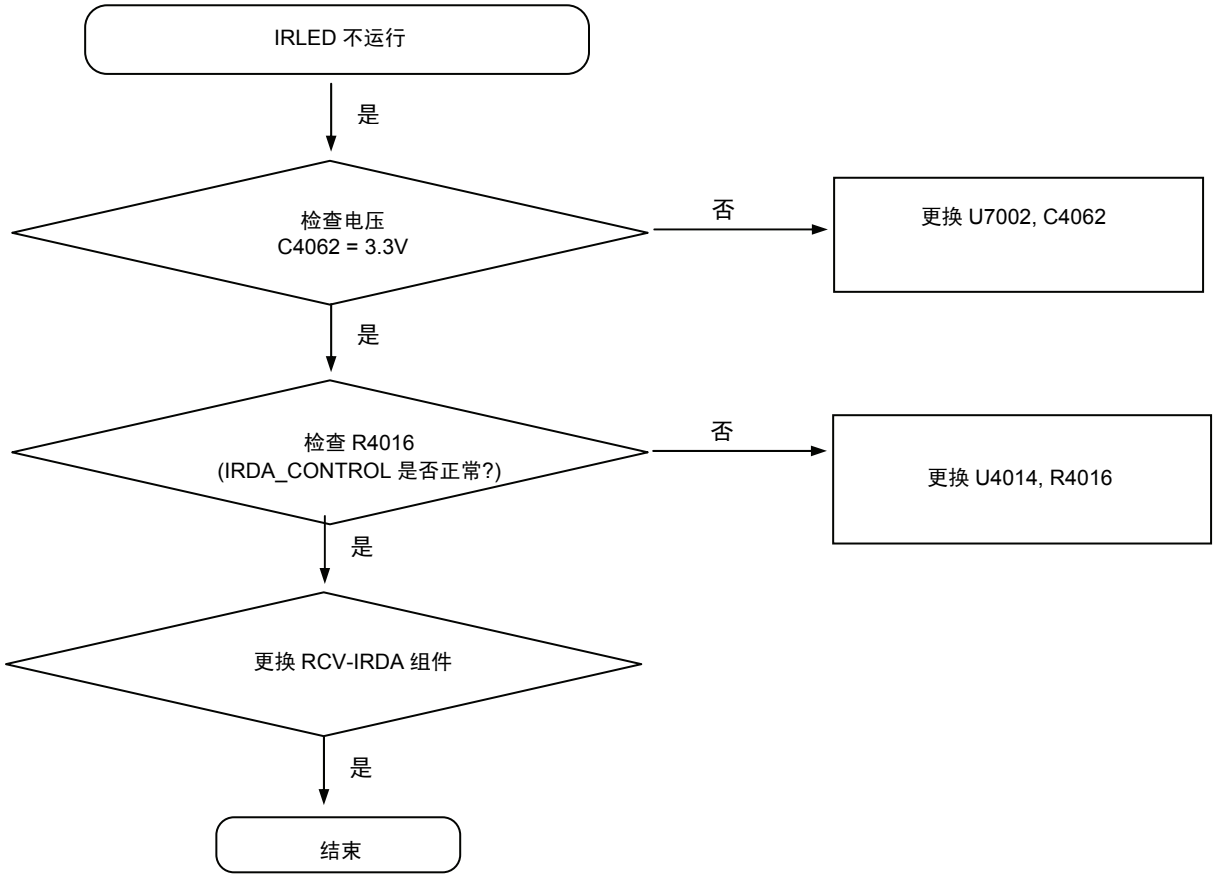

保密和所有权-本维修手册内容的变更恕不另行通知。
未经三星书面授权而发布，传送，或违背本文件中的任何内容或数据是严格禁止的。

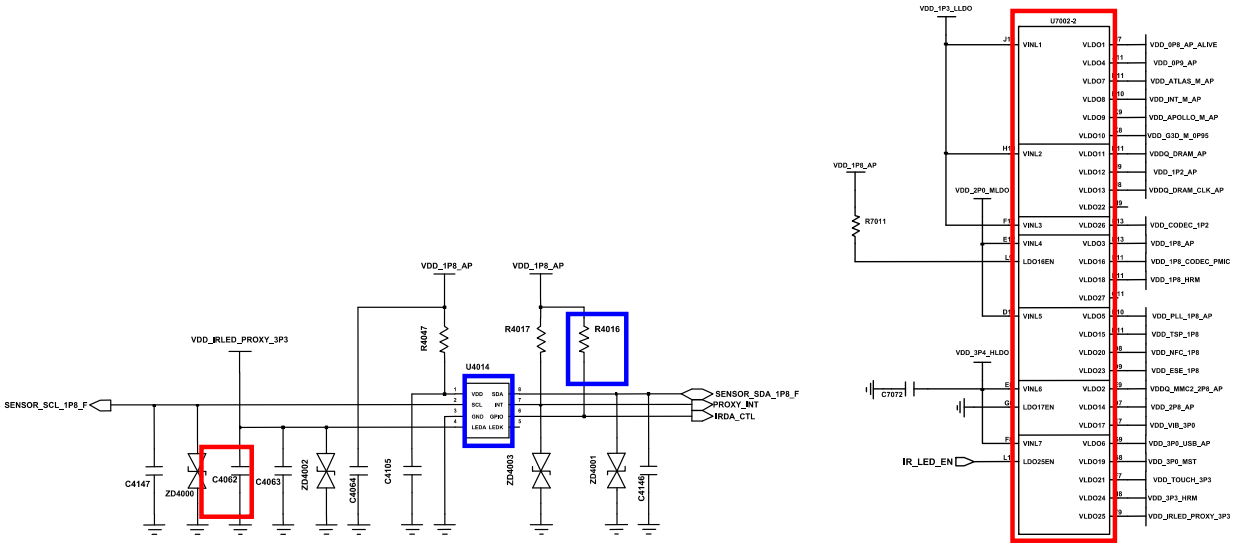

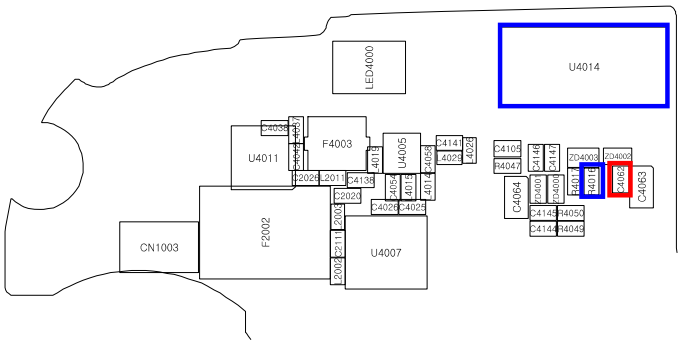

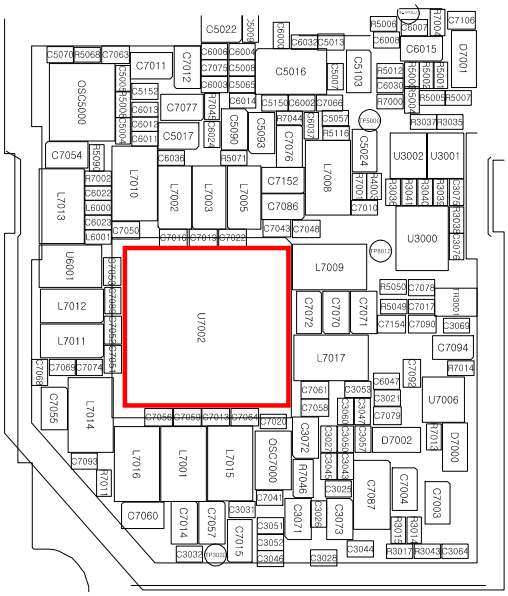

Confidential and proprietary-the contents in this service guide subject to change without prior notice.
Distribution, transmission, or infringement of any content or data from this document without Samsung's written authorization is strictly prohibited.

8-3-9-1. 麦克风部分—主麦克风

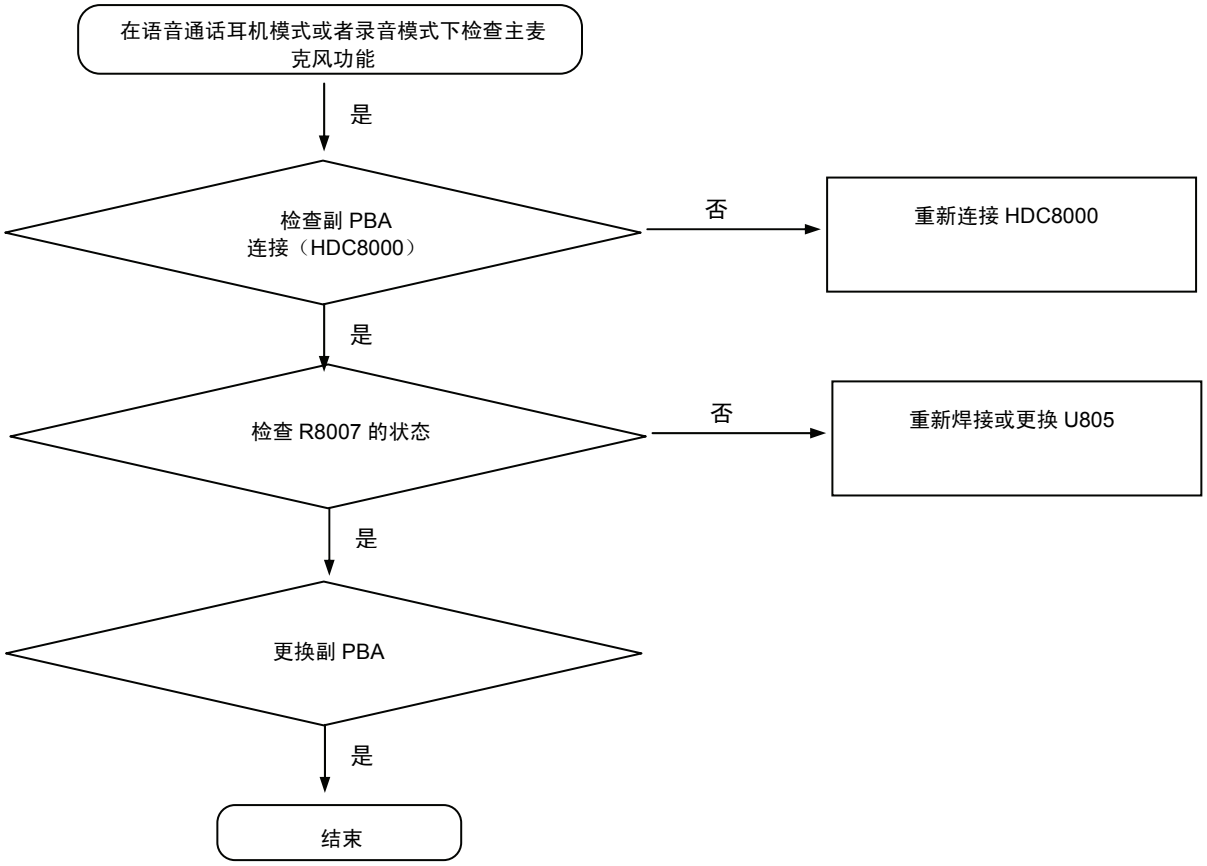

保密和所有权-本维修手册内容的变更恕不另行通知。
未经三星书面授权而发布，传送，或违背本文件中的任何内容或数据是严格禁止的。

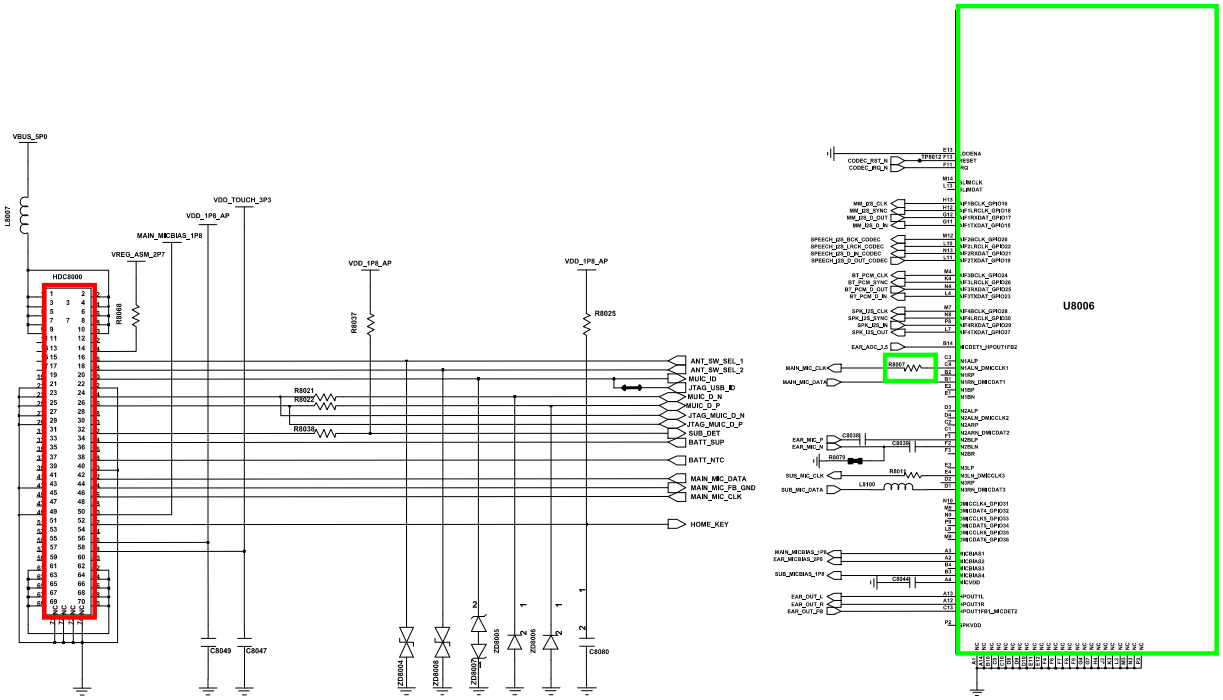

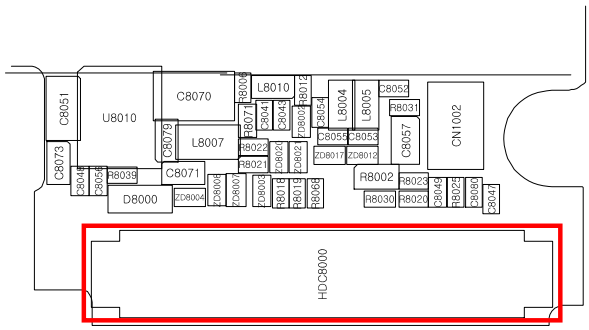

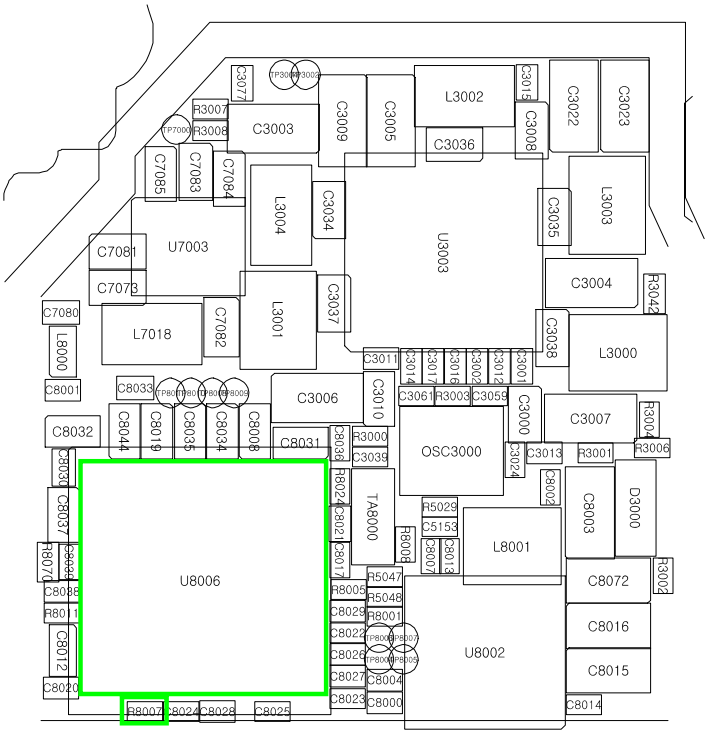

Confidential and proprietary-the contents in this service guide subject to change without prior notice.
Distribution, transmission, or infringement of any content or data from this document without Samsung's written authorization is strictly prohibited.

8-3-9-2. 麦克风部分—副（第二个）麦克风

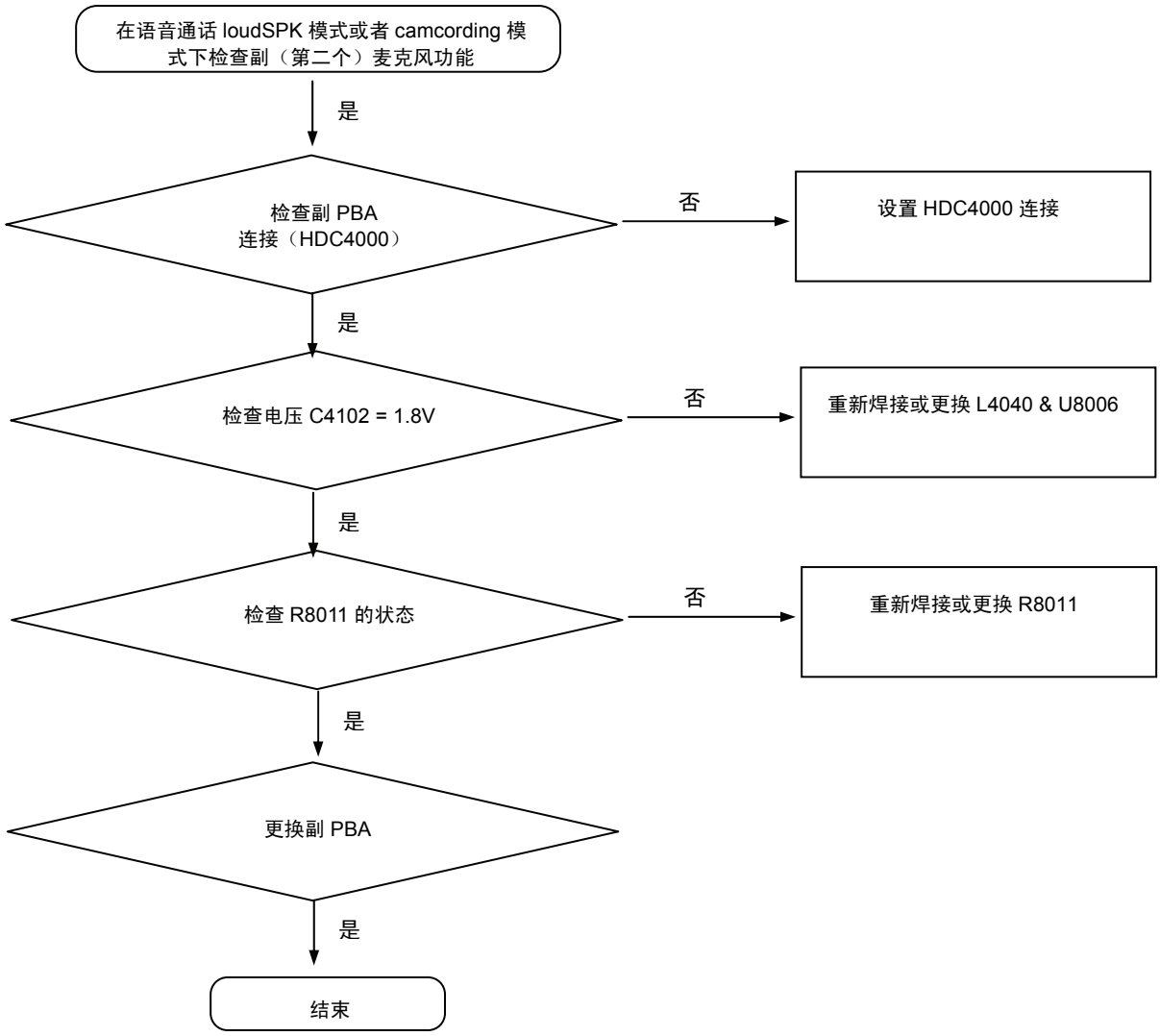

保密和所有权-本维修手册内容的变更恕不另行通知。
未经三星书面授权而发布，传送，或违背本文件中的任何内容或数据是严格禁止的。

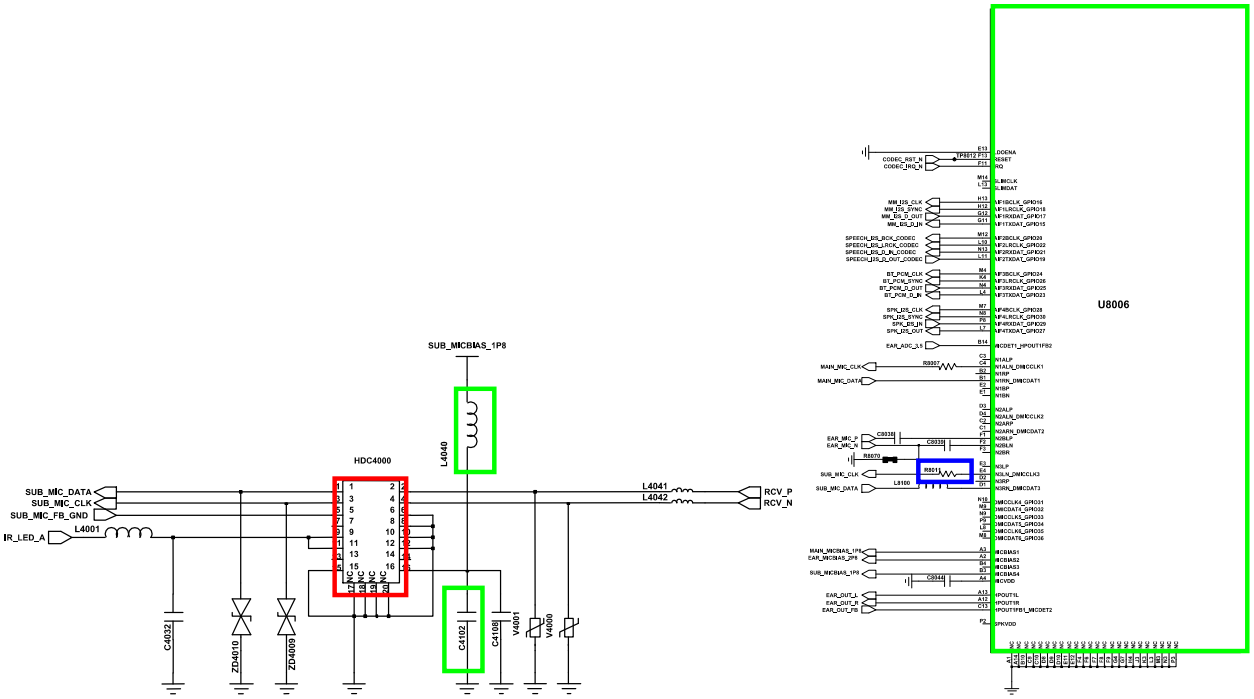

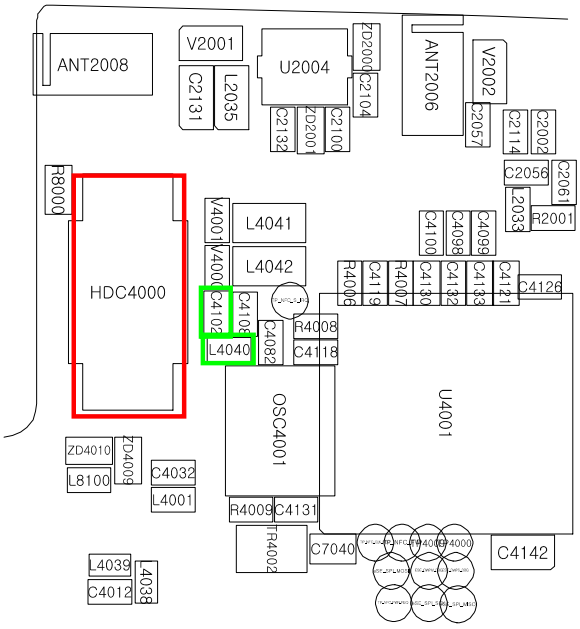

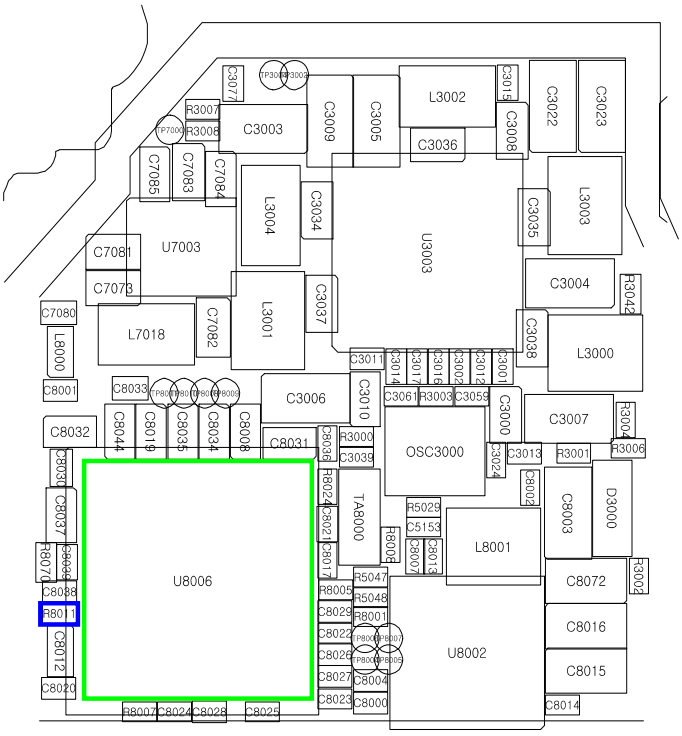

Confidential and proprietary-the contents in this service guide subject to change without prior notice.
Distribution, transmission, or infringement of any content or data from this document without Samsung's written authorization is strictly prohibited.

8-3-10. 扬声器部分

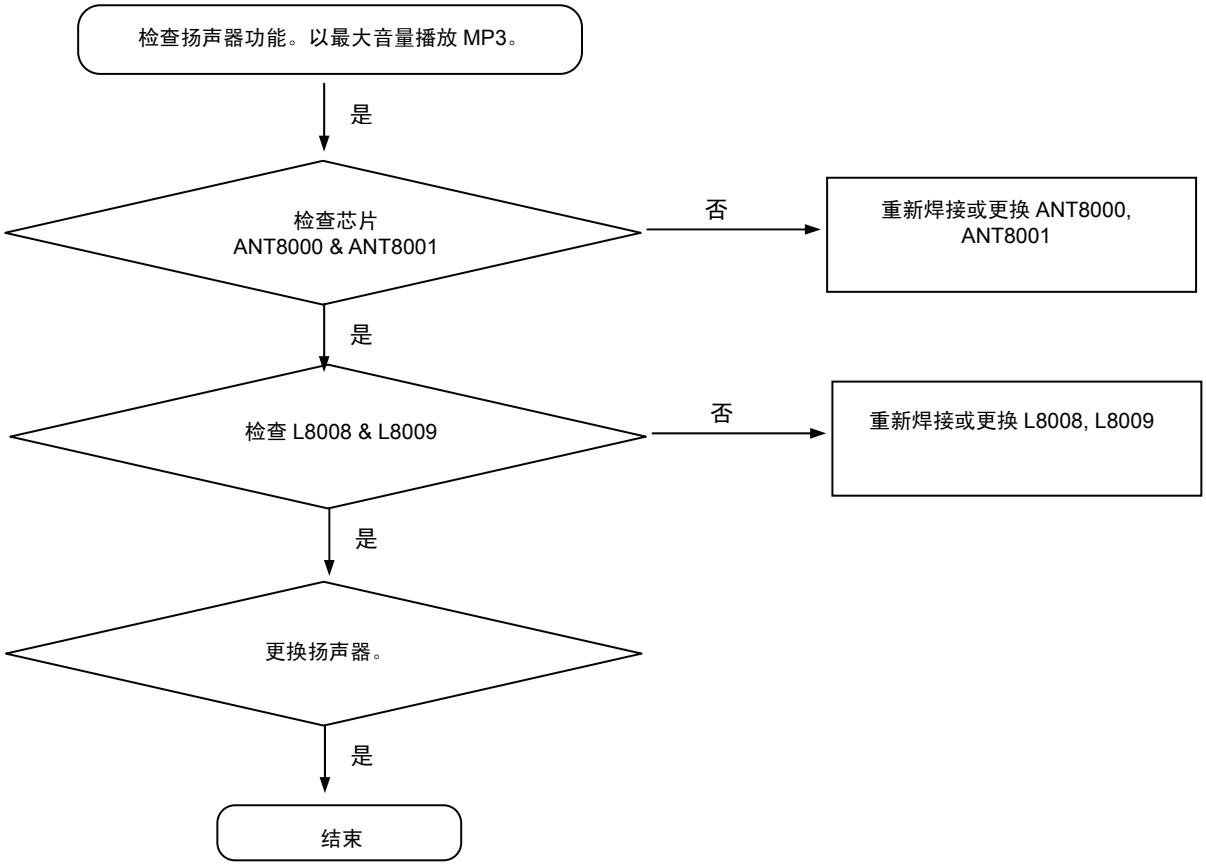

保密和所有权-本维修手册内容的变更恕不另行通知。
未经三星书面授权而发布，传送，或违背本文件中的任何内容或数据是严格禁止的。

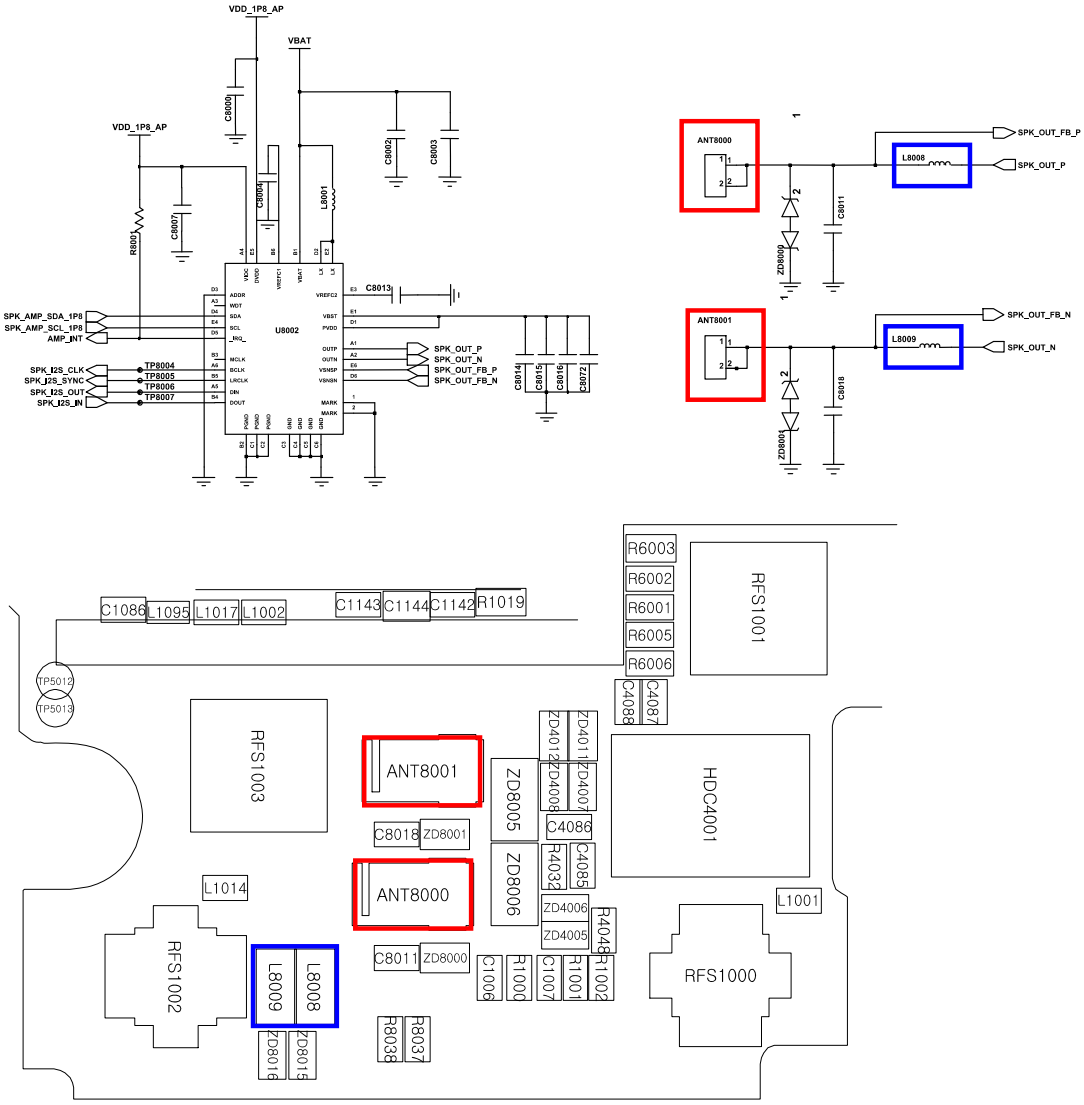

保密和所有权-本维修手册内容的变更恕不另行通知。
未经三星书面授权而发布，传送，或违背本文件中的任何内容或数据是严格禁止的。

8-3-11. 接收器部分

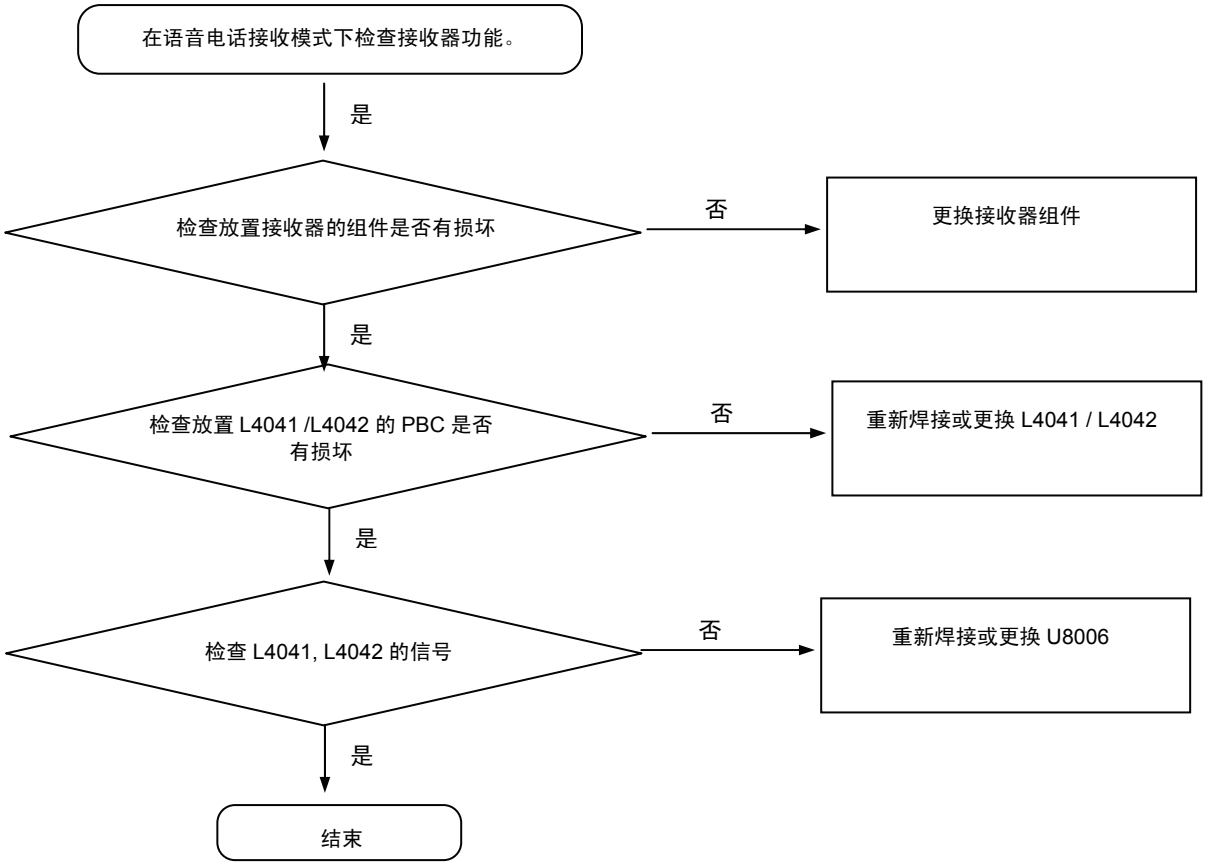

保密和所有权-本维修手册内容的变更恕不另行通知。
未经三星书面授权而发布，传送，或违背本文件中的任何内容或数据是严格禁止的。

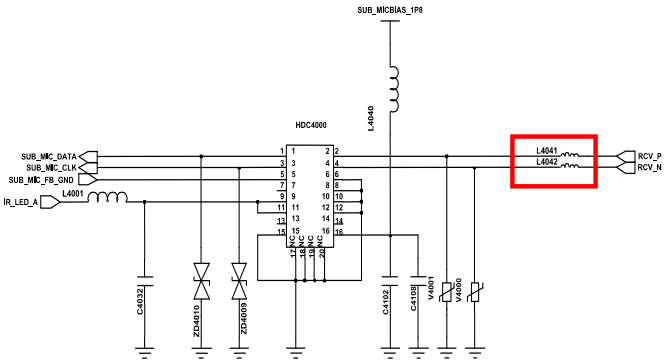

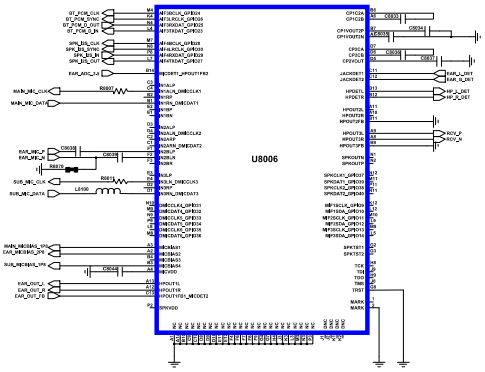

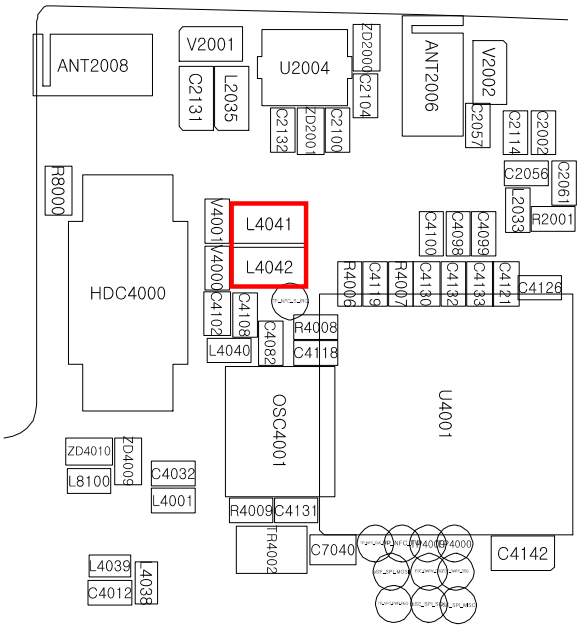

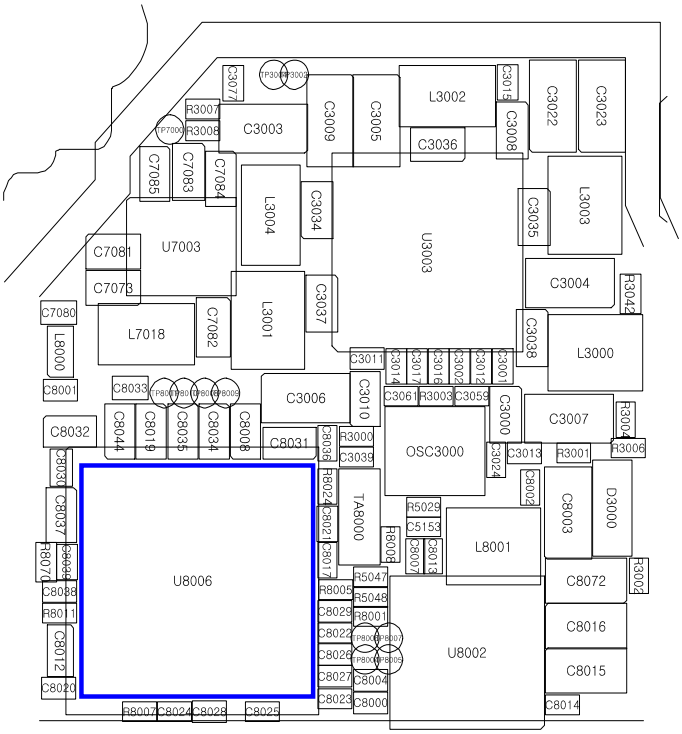

Confidential and proprietary-the contents in this service guide subject to change without prior notice.
Distribution, transmission, or infringement of any content or data from this document without Samsung's written authorization is strictly prohibited.

8-3-12. BT/WIFI

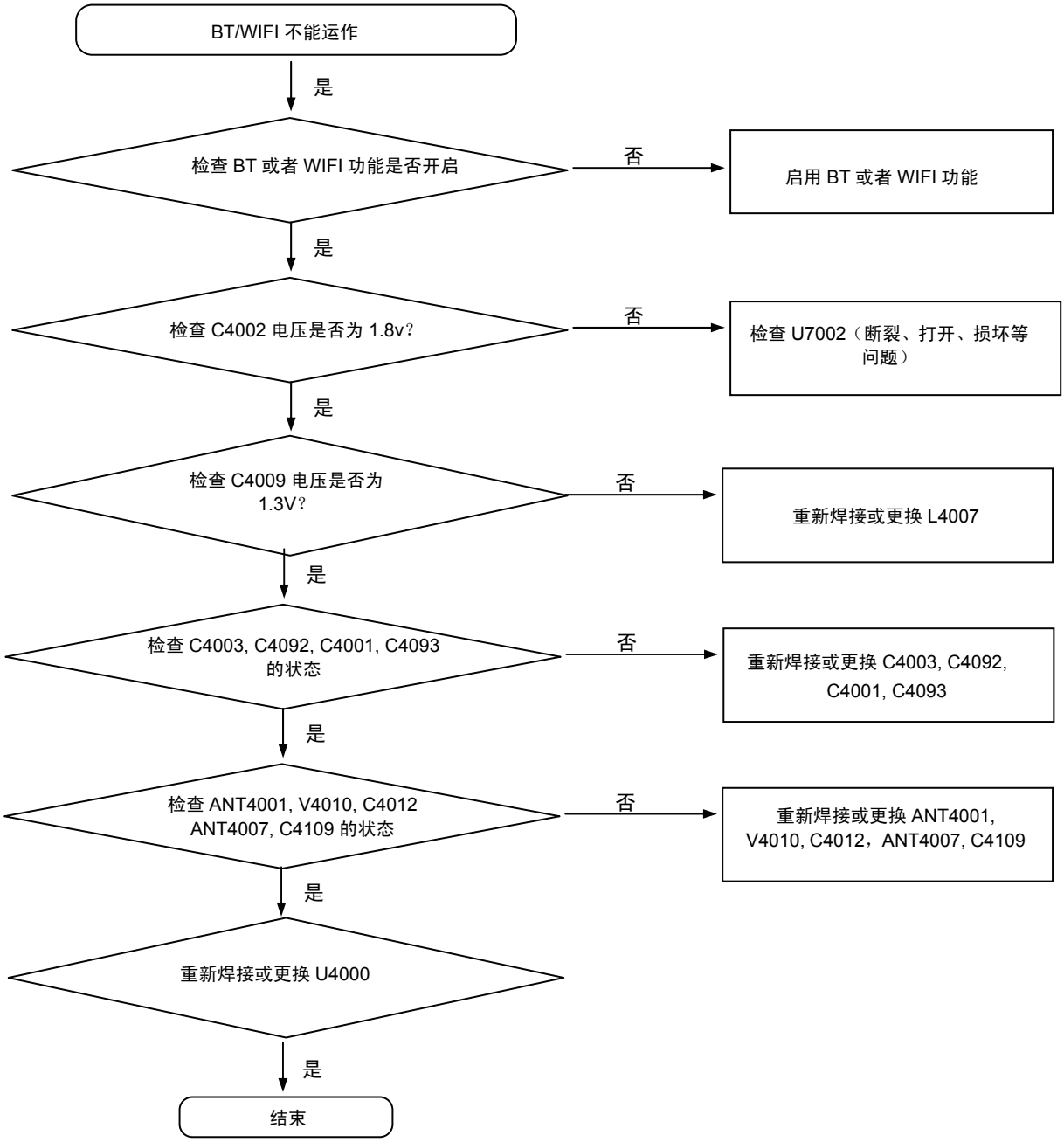

保密和所有权-本维修手册内容的变更恕不另行通知。
未经三星书面授权而发布，传送，或违背本文件中的任何内容或数据是严格禁止的。

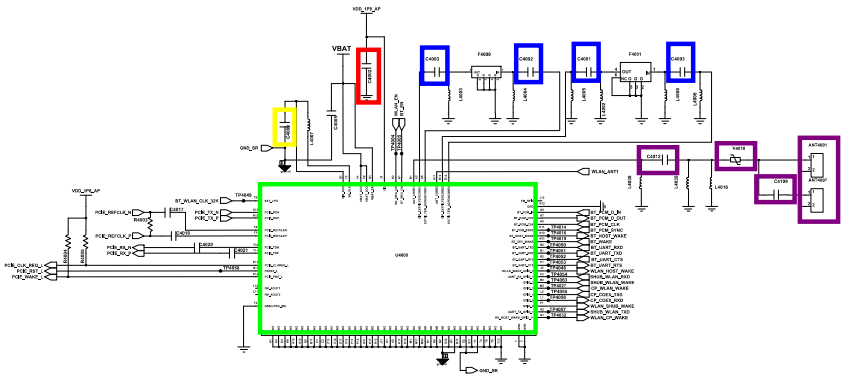

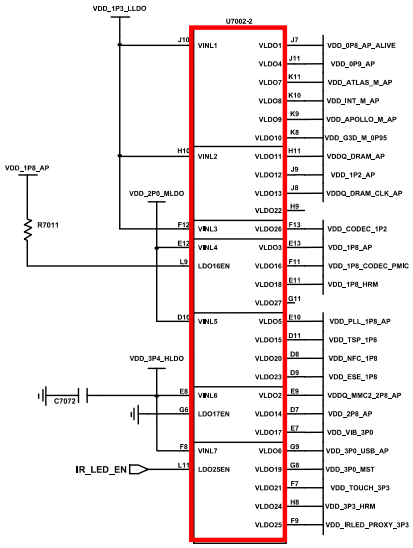

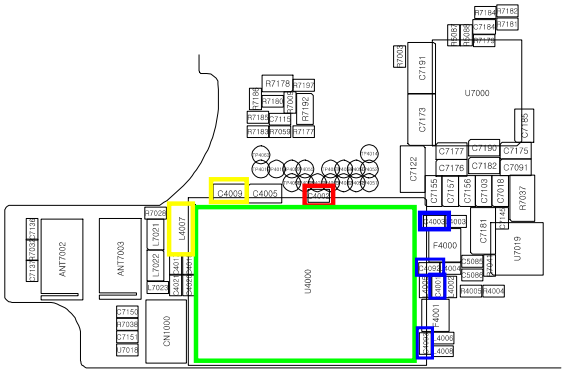

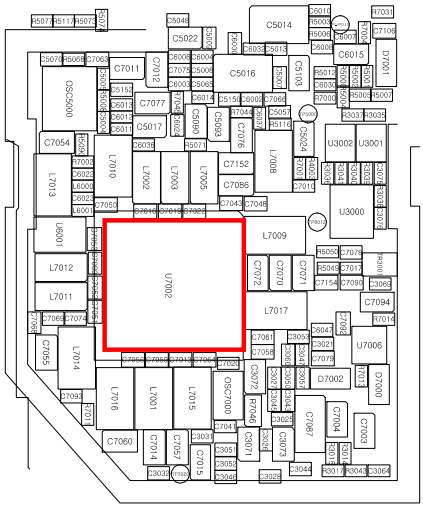

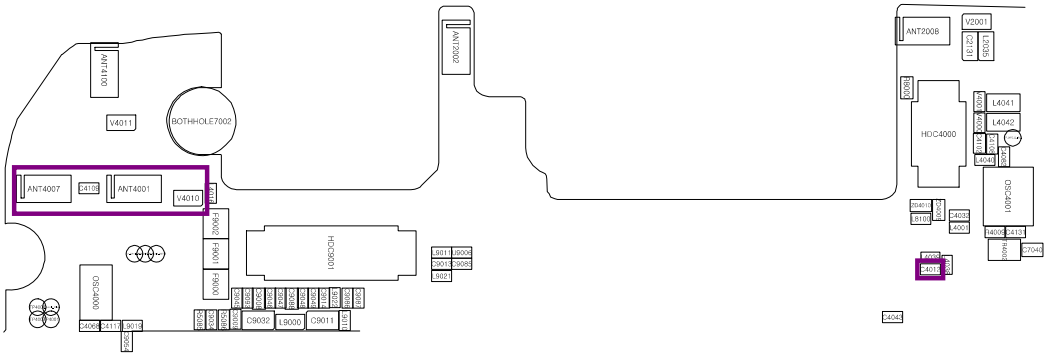

Confidential and proprietary-the contents in this service guide subject to change without prior notice.
Distribution, transmission, or infringement of any content or data from this document without Samsung's written authorization is strictly prohibited.

8-3-13. GPS

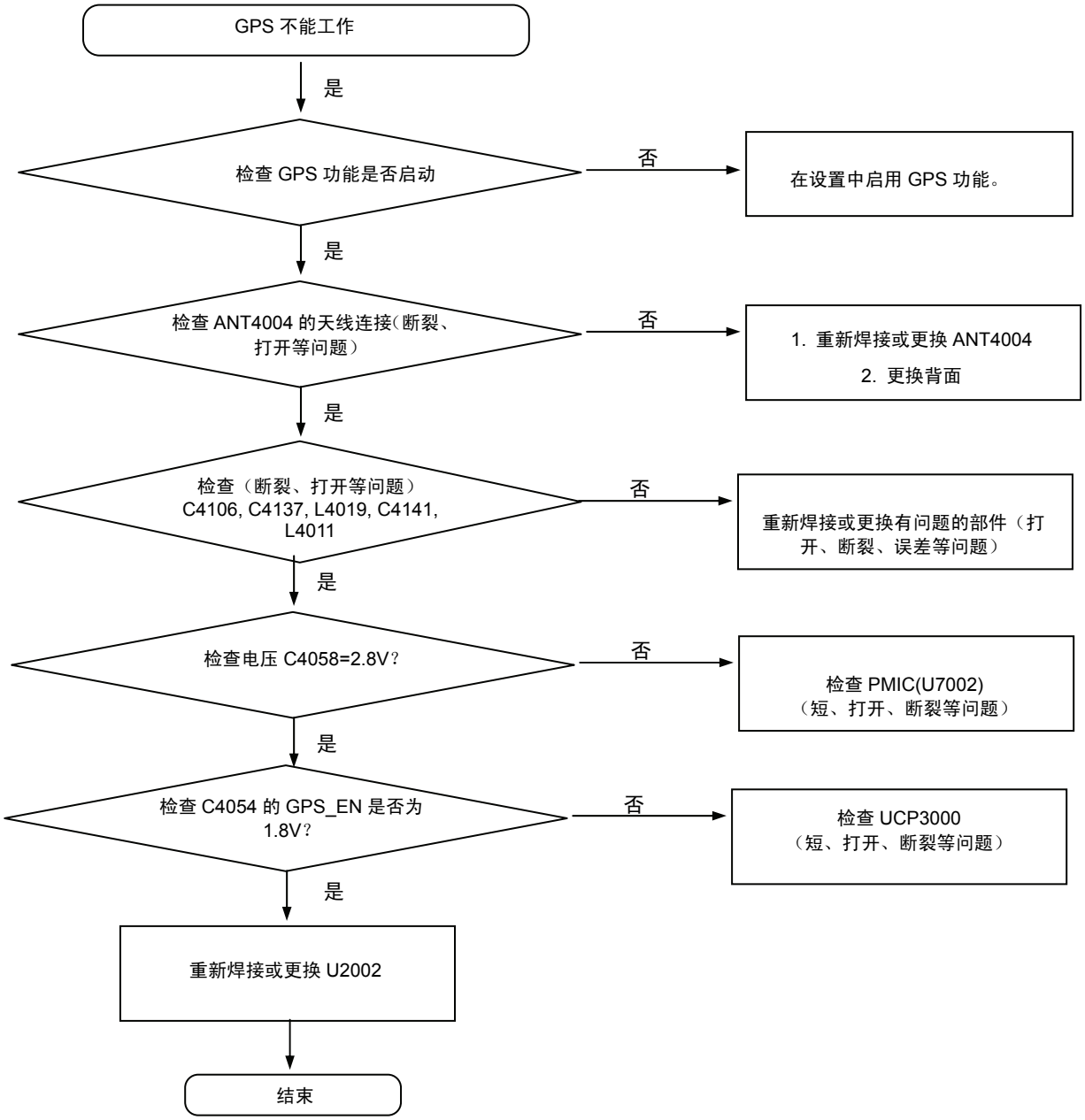

保密和所有权-本维修手册内容的变更恕不另行通知。
未经三星书面授权而发布，传送，或违背本文件中的任何内容或数据是严格禁止的。

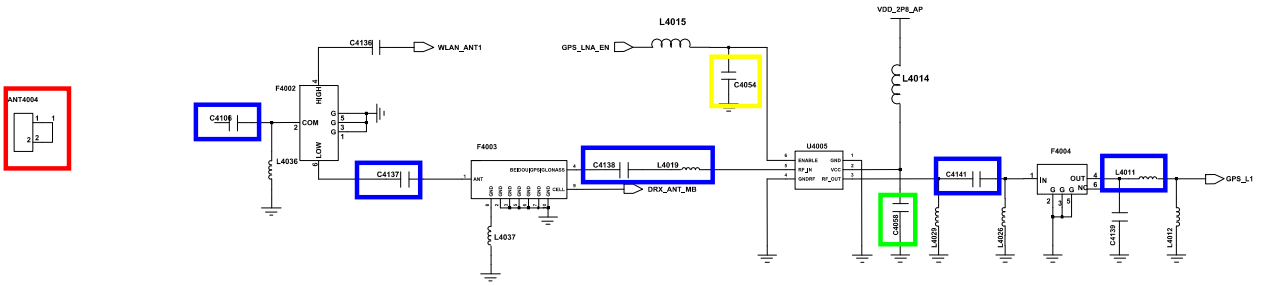

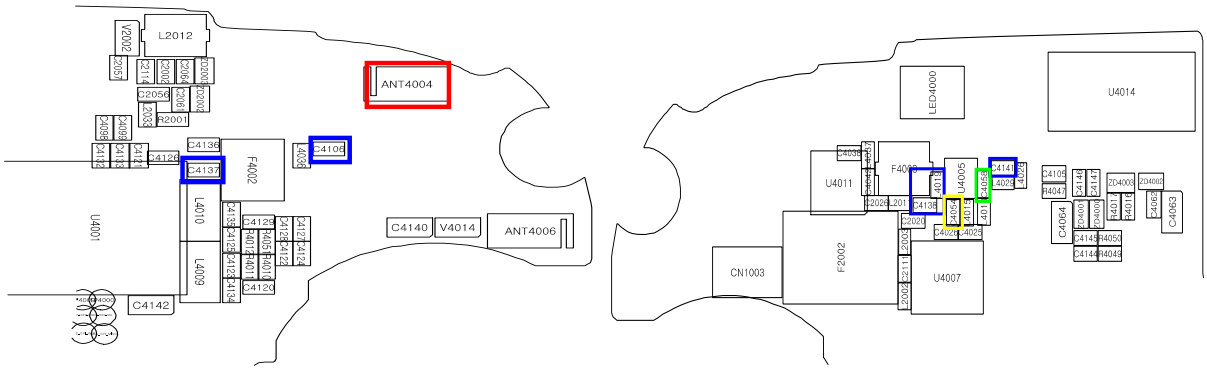

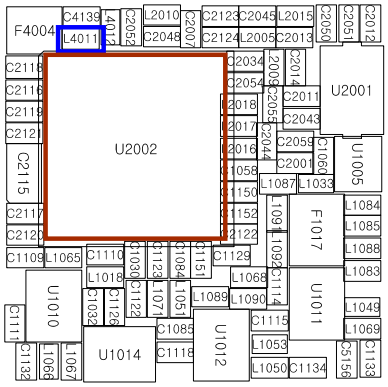

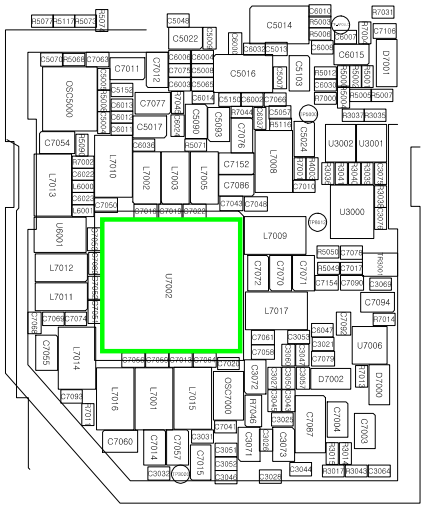

Confidential and proprietary-the contents in this service guide subject to change without prior notice.
Distribution, transmission, or infringement of any content or data from this document without Samsung's written authorization is strictly prohibited.

8-3-14. NFC

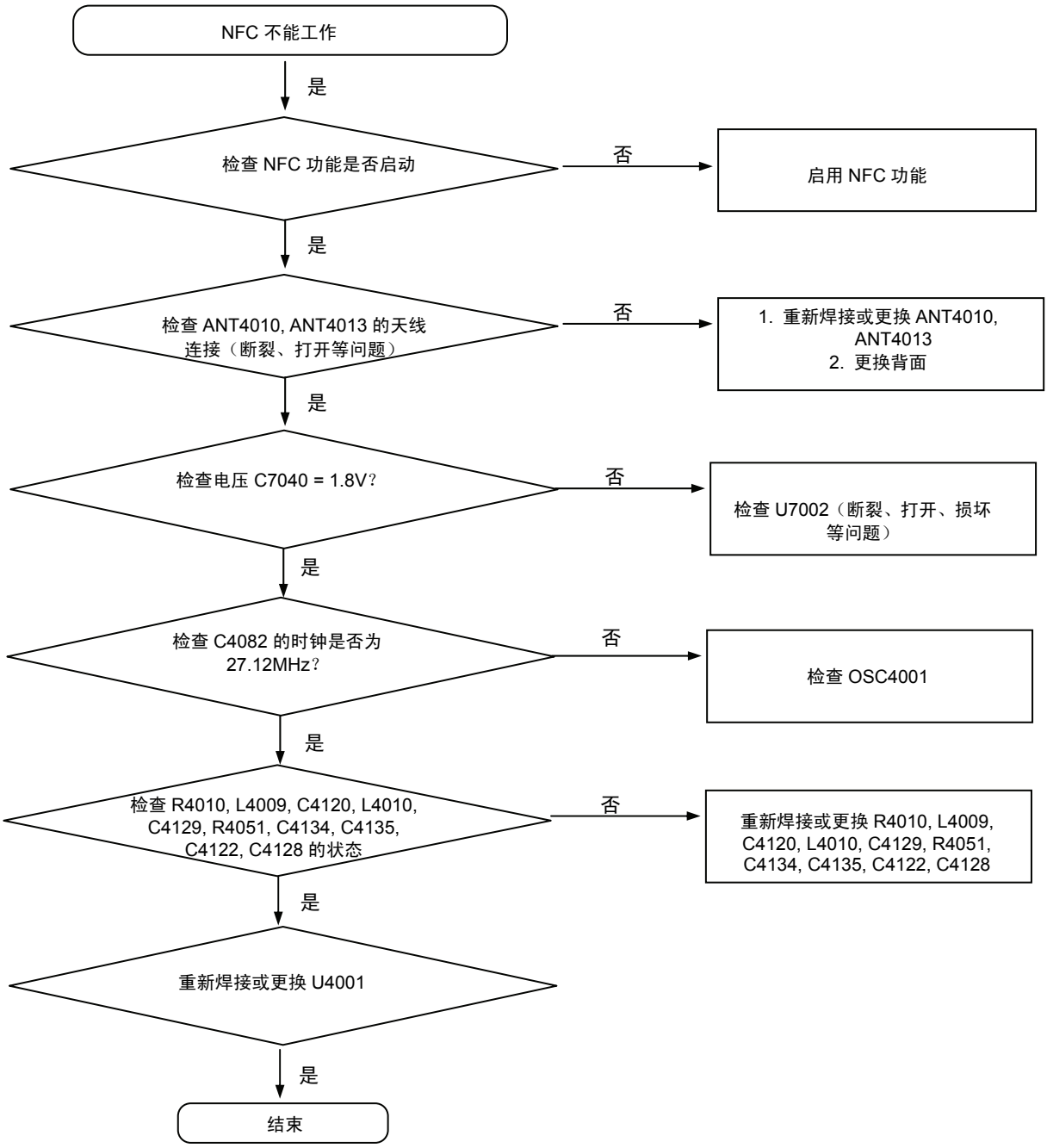

保密和所有权-本维修手册内容的变更恕不另行通知。
未经三星书面授权而发布，传送，或违背本文件中的任何内容或数据是严格禁止的。

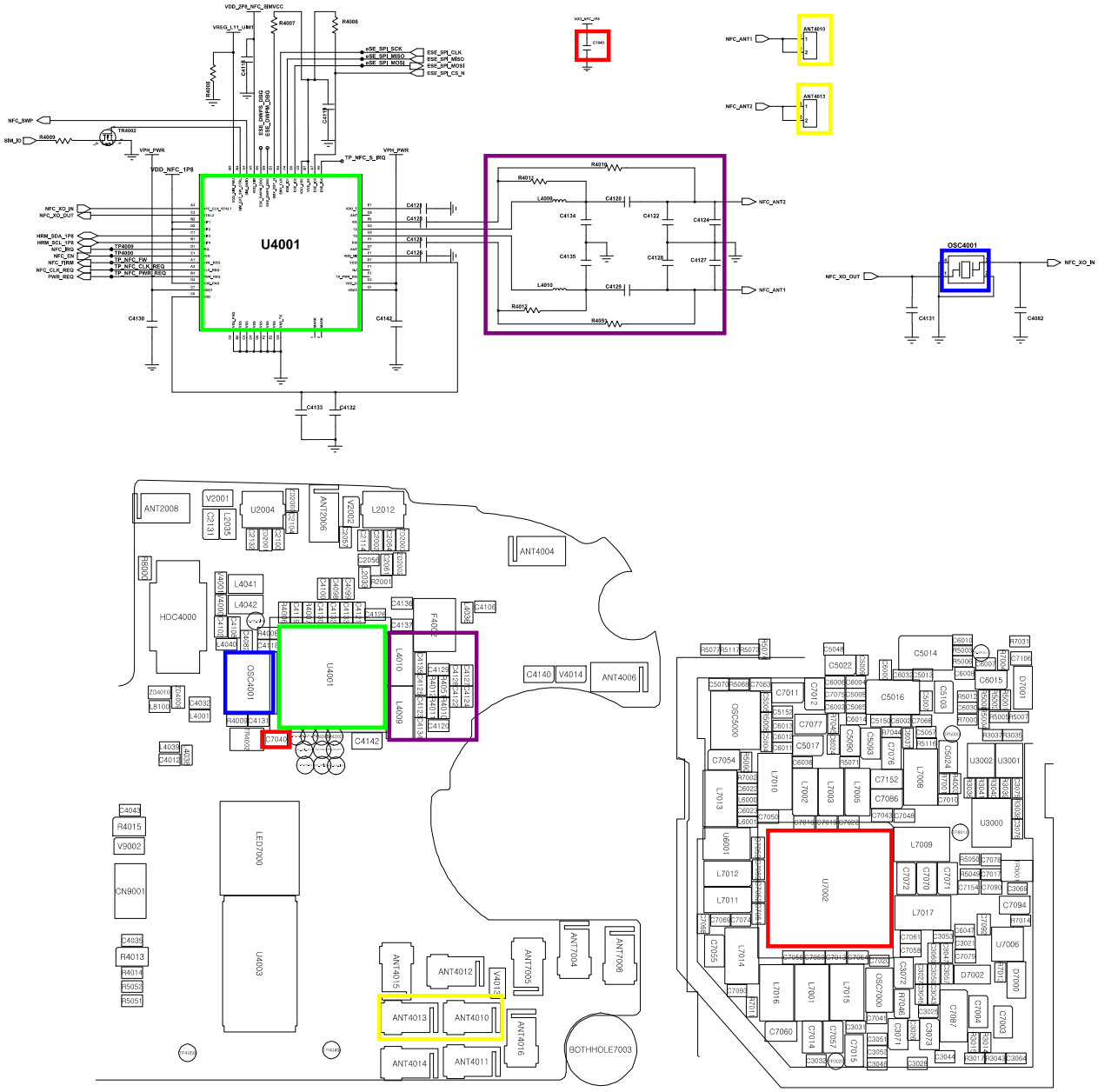

Confidential and proprietary-the contents in this service guide subject to change without prior notice.
Distribution, transmission, or infringement of any content or data from this document without Samsung's written authorization is strictly prohibited.

8-3-15. 显示屏

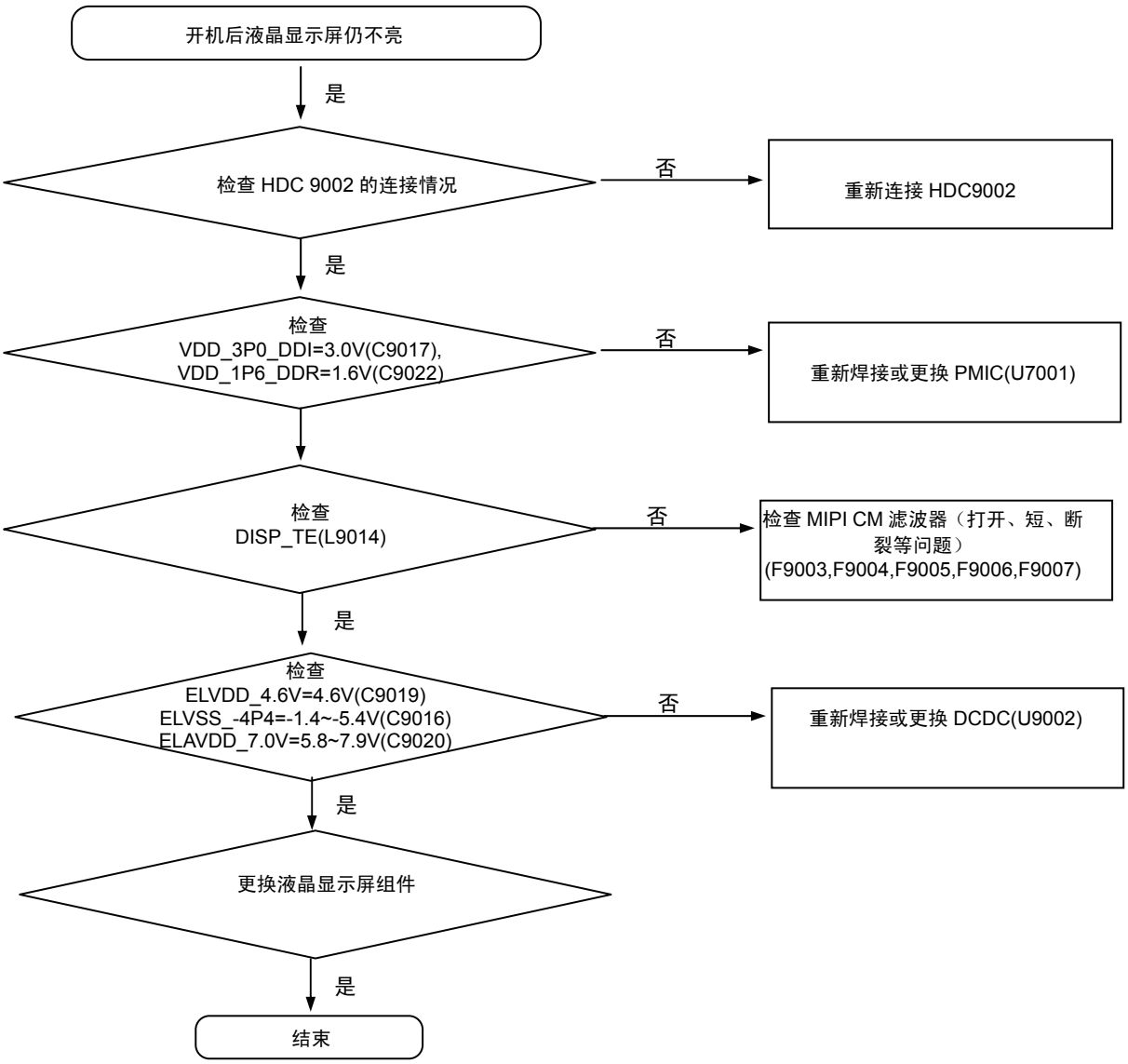

保密和所有权-本维修手册内容的变更恕不另行通知。
未经三星书面授权而发布，传送，或违背本文件中的任何内容或数据是严格禁止的。

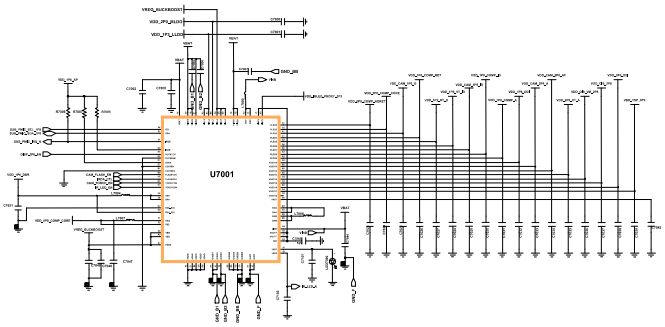

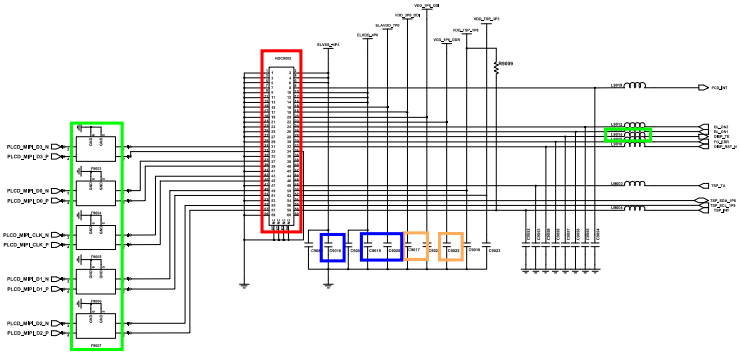

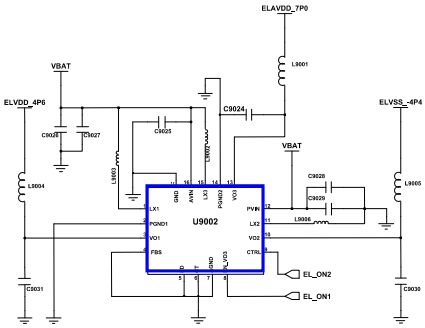

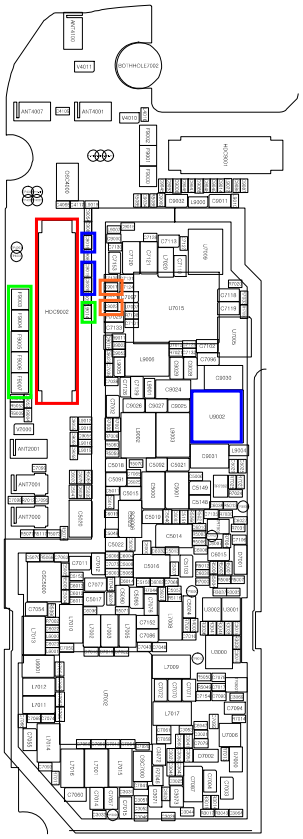

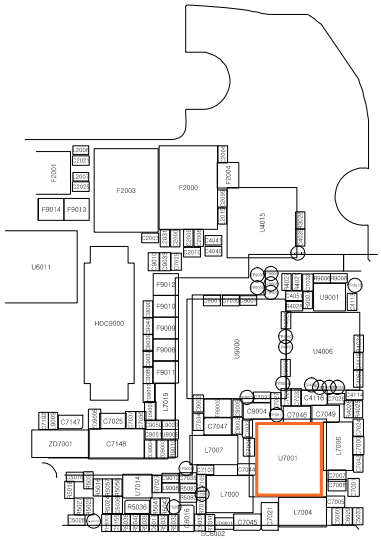

Confidential and proprietary-the contents in this service guide subject to change without prior notice.
Distribution, transmission, or infringement of any content or data from this document without Samsung's written authorization is strictly prohibited.

8-3-16. 16M 摄像头

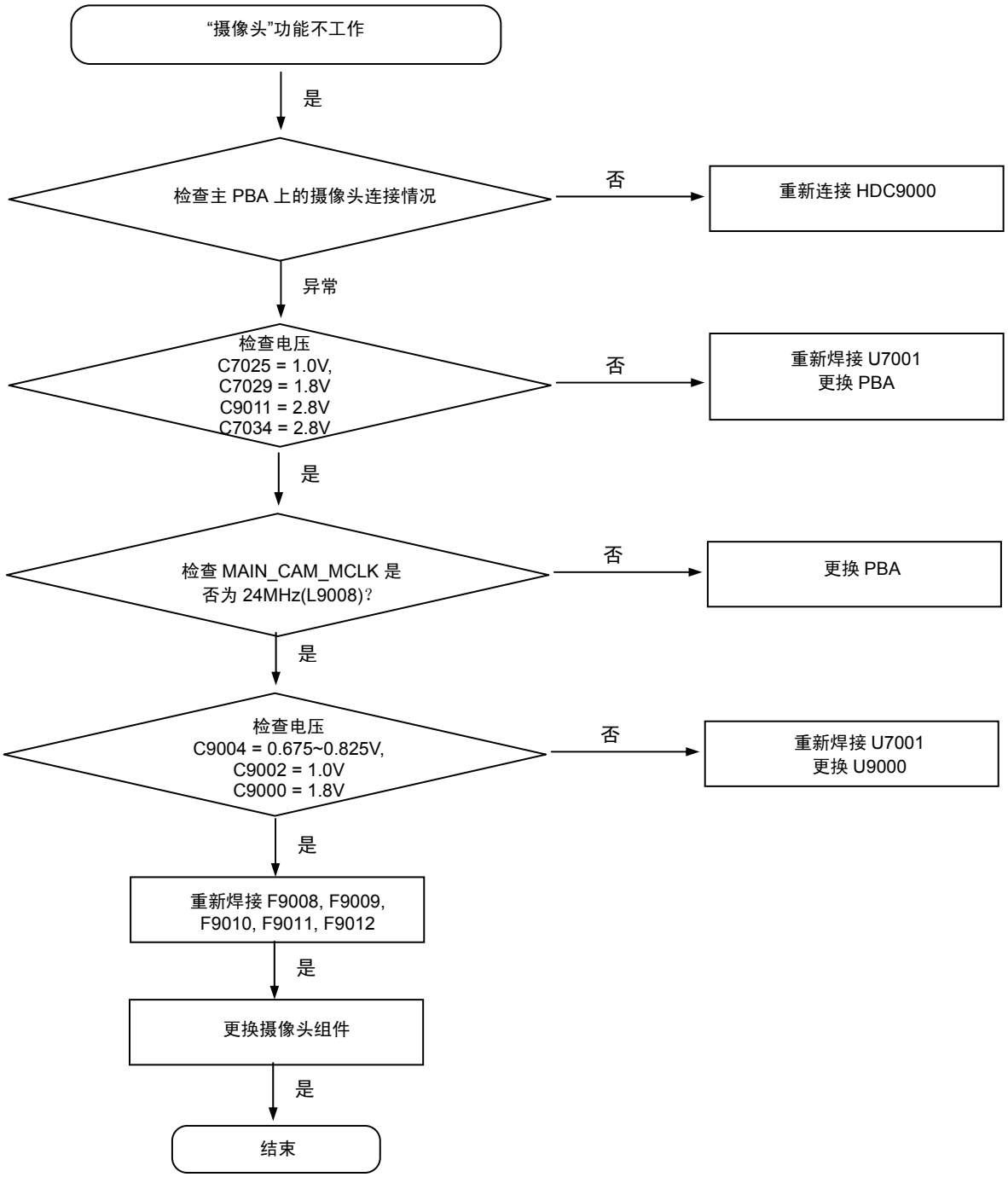

保密和所有权-本维修手册内容的变更恕不另行通知。
未经三星书面授权而发布，传送，或违背本文件中的任何内容或数据是严格禁止的。

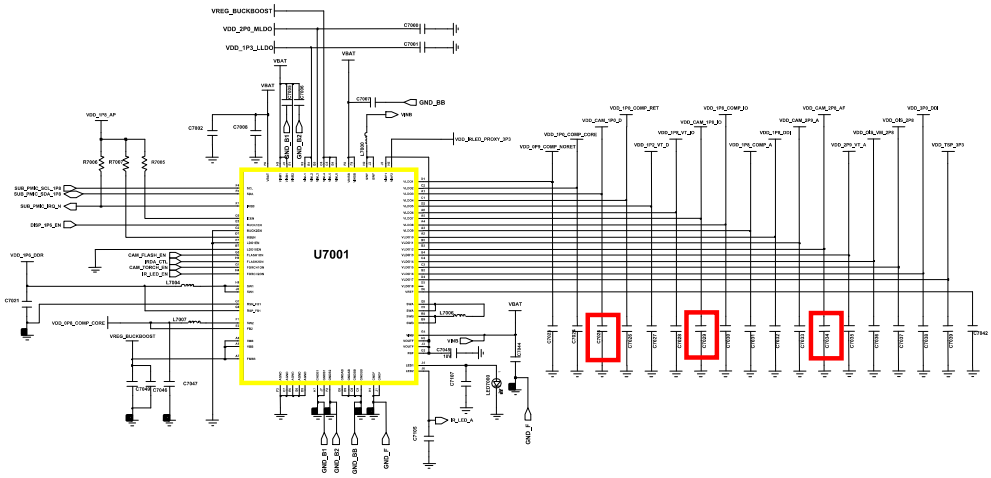

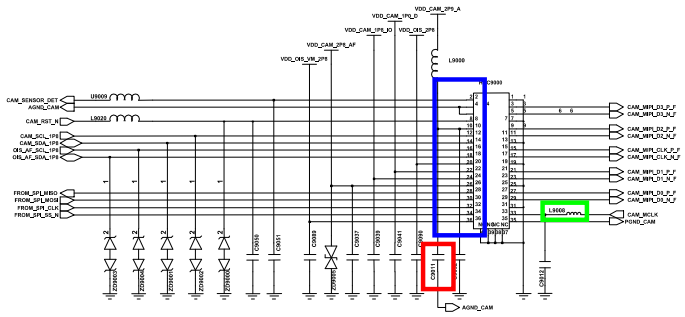

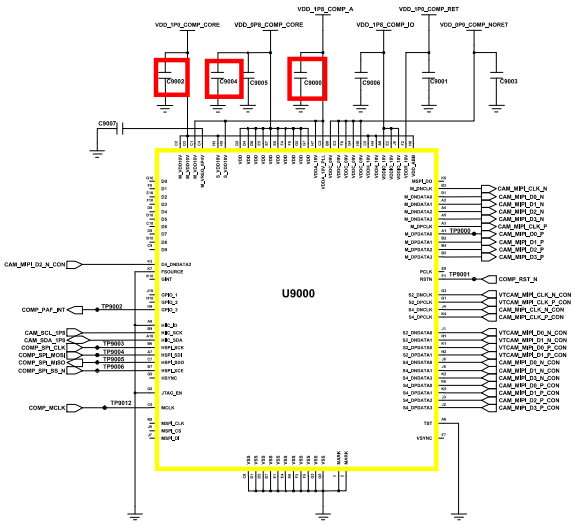

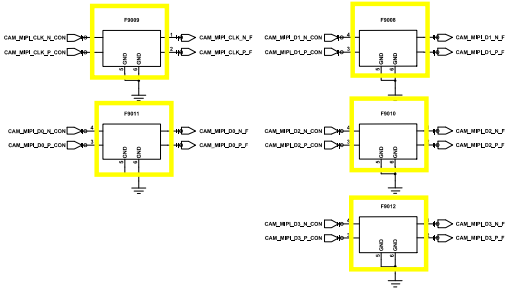

Confidential and proprietary-the contents in this service guide subject to change without prior notice.
Distribution, transmission, or infringement of any content or data from this document without Samsung's written authorization is strictly prohibited.

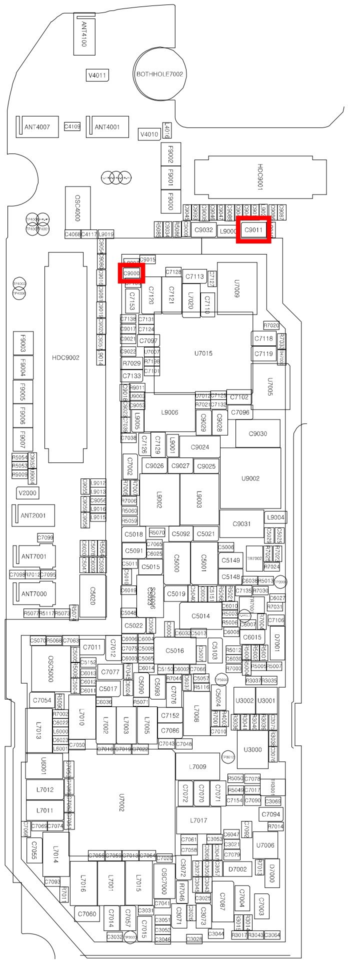

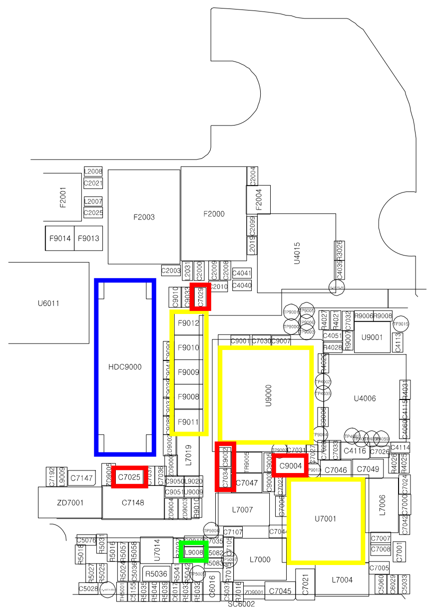

Confidential and proprietary-the contents in this service guide subject to change without prior notice.
Distribution, transmission, or infringement of any content or data from this document without Samsung's written authorization is strictly prohibited.

8-3-17. 5M 摄像头

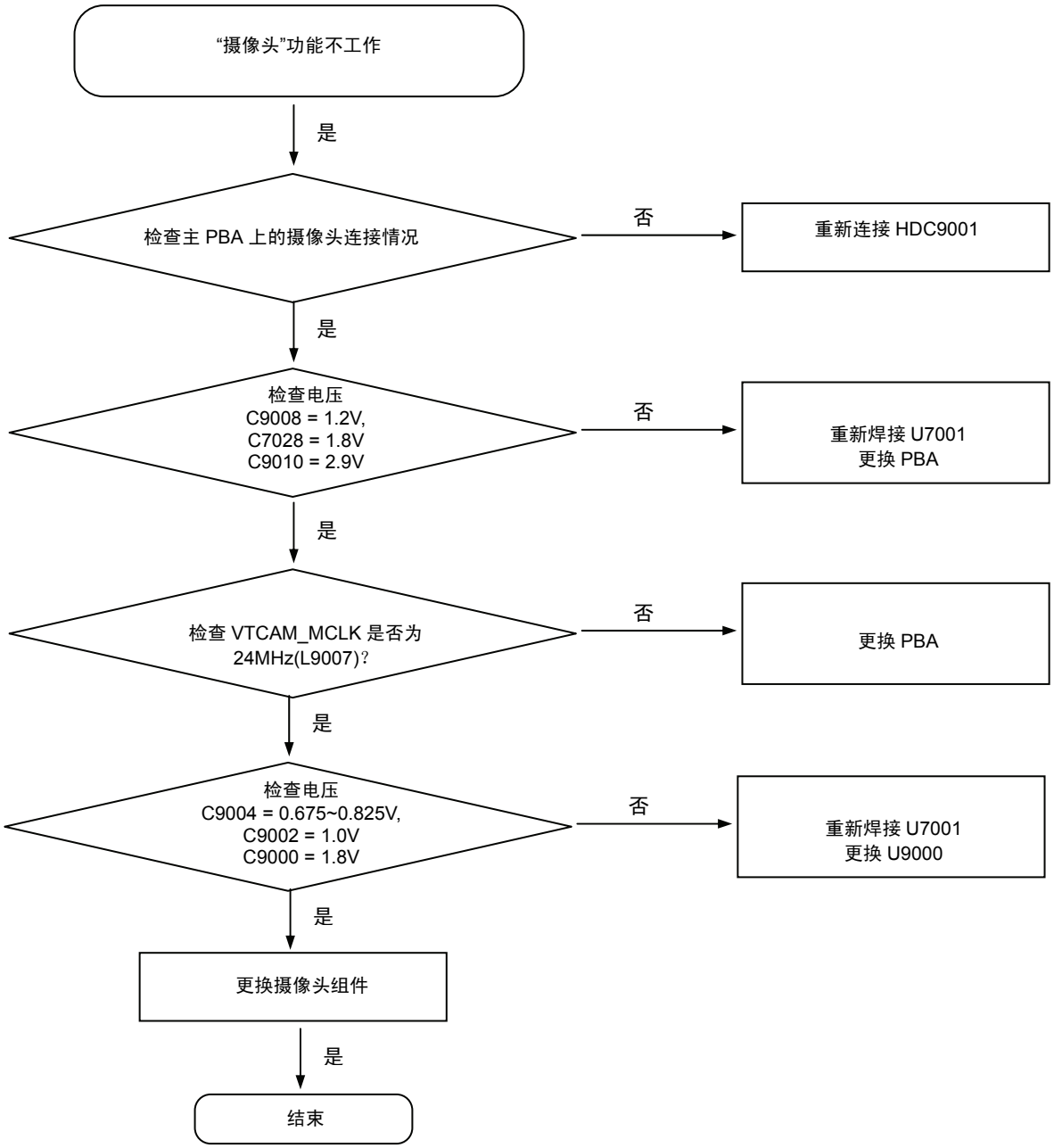

保密和所有权-本维修手册内容的变更恕不另行通知。
未经三星书面授权而发布，传送，或违背本文件中的任何内容或数据是严格禁止的。

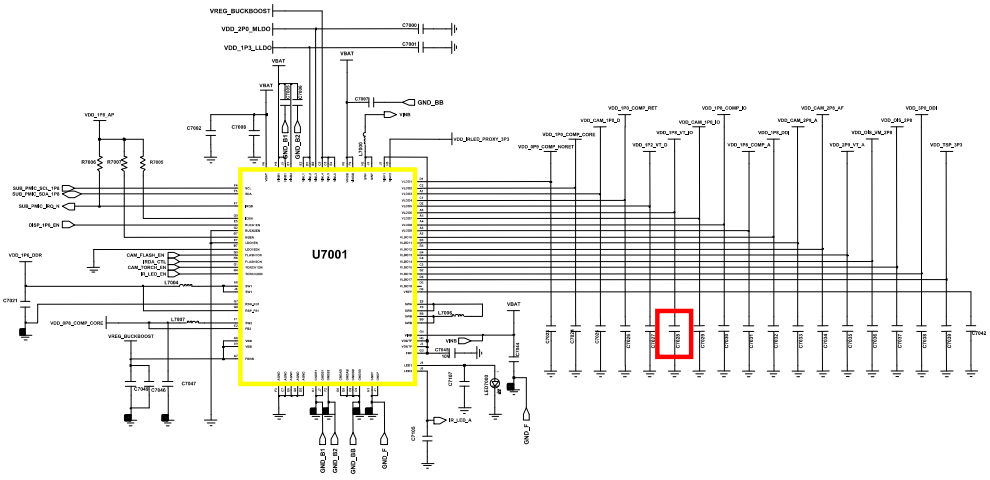

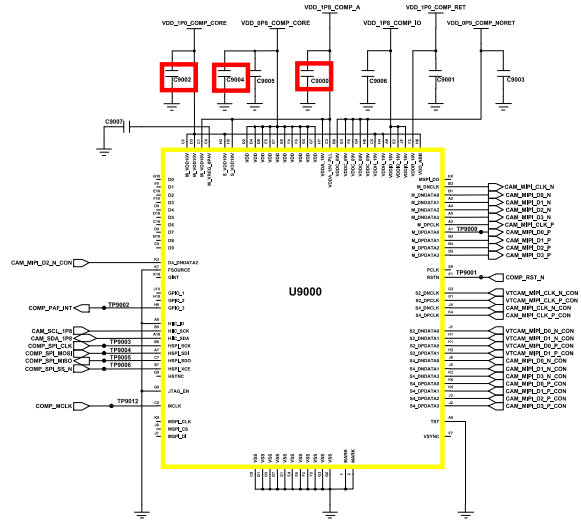

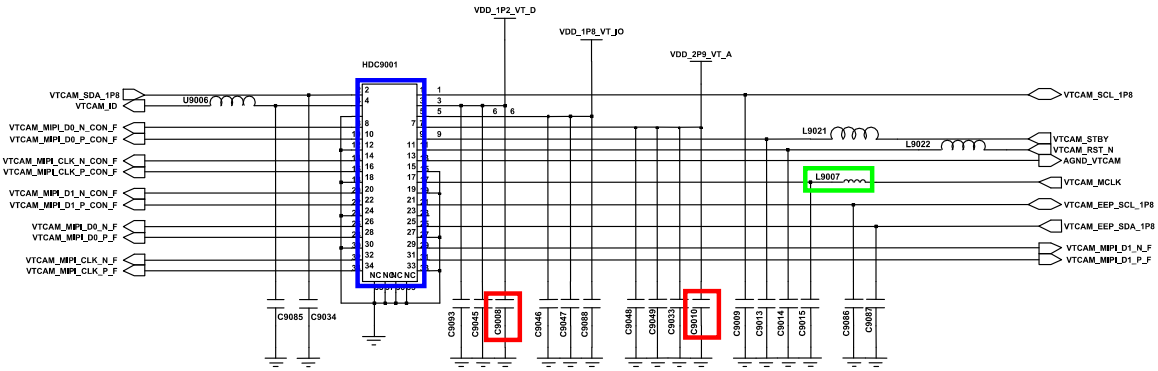

Confidential and proprietary-the contents in this service guide subject to change without prior notice.
Distribution, transmission, or infringement of any content or data from this document without Samsung's written authorization is strictly prohibited.

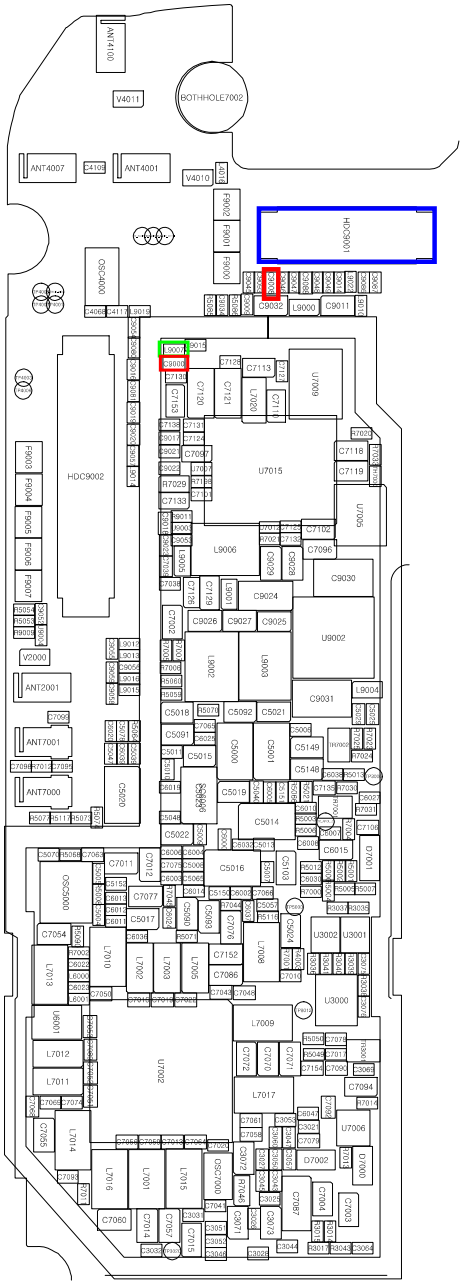

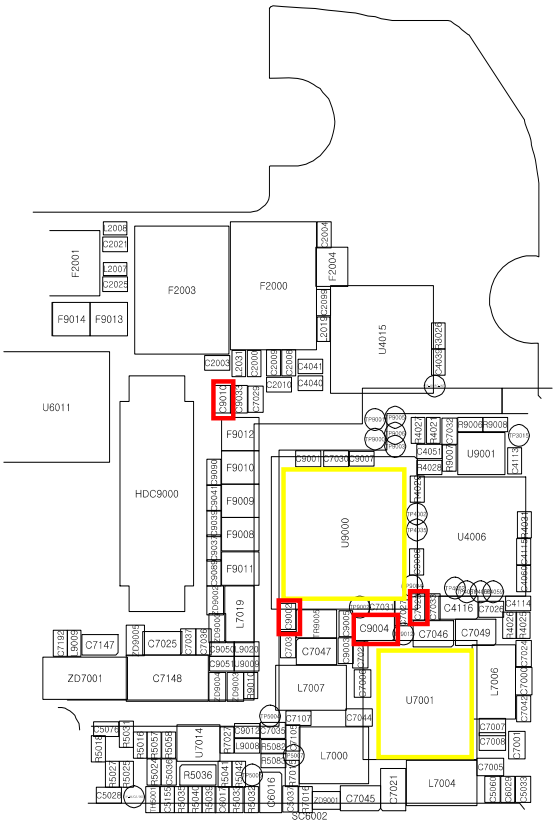

Confidential and proprietary-the contents in this service guide subject to change without prior notice.
Distribution, transmission, or infringement of any content or data from this document without Samsung's written authorization is strictly prohibited.

8-3-18. TSP

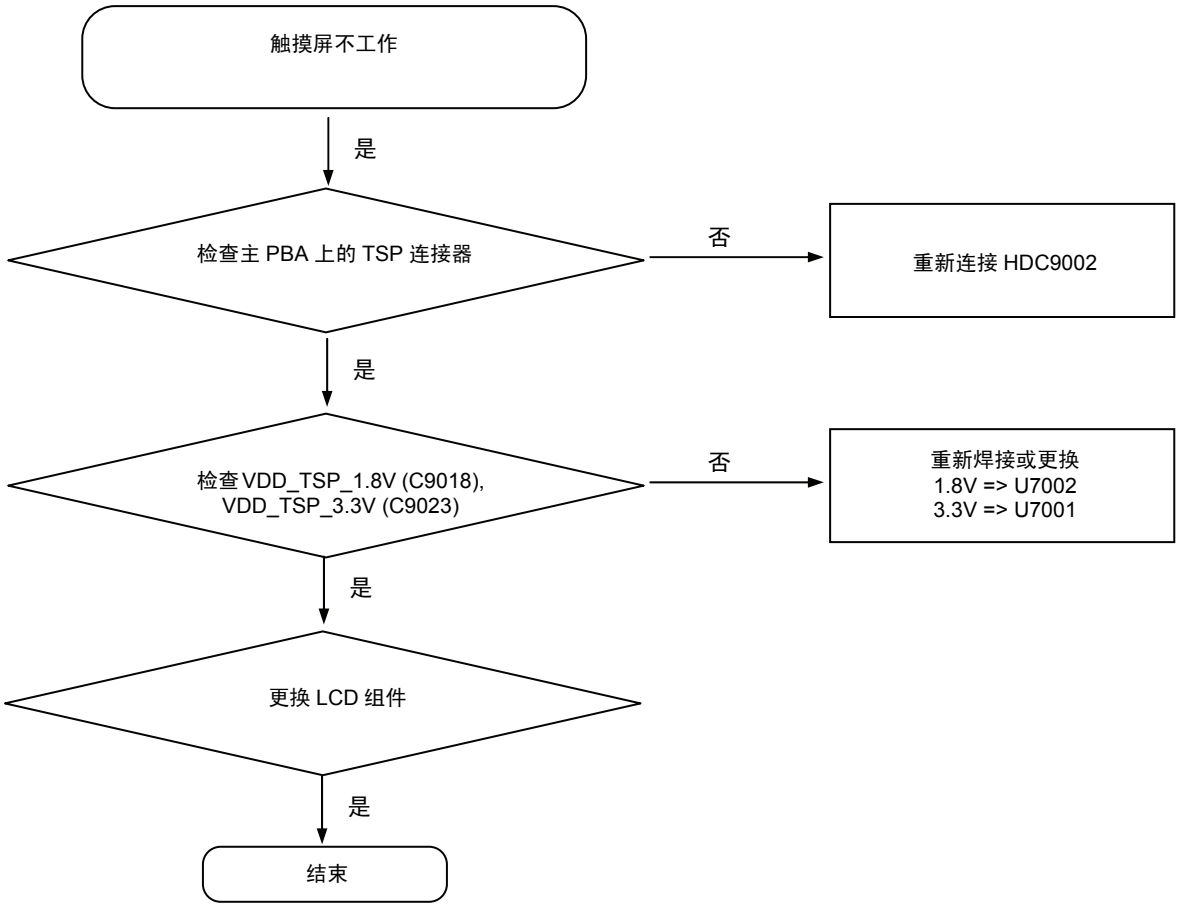

保密和所有权-本维修手册内容的变更恕不另行通知。
未经三星书面授权而发布，传送，或违背本文件中的任何内容或数据是严格禁止的。

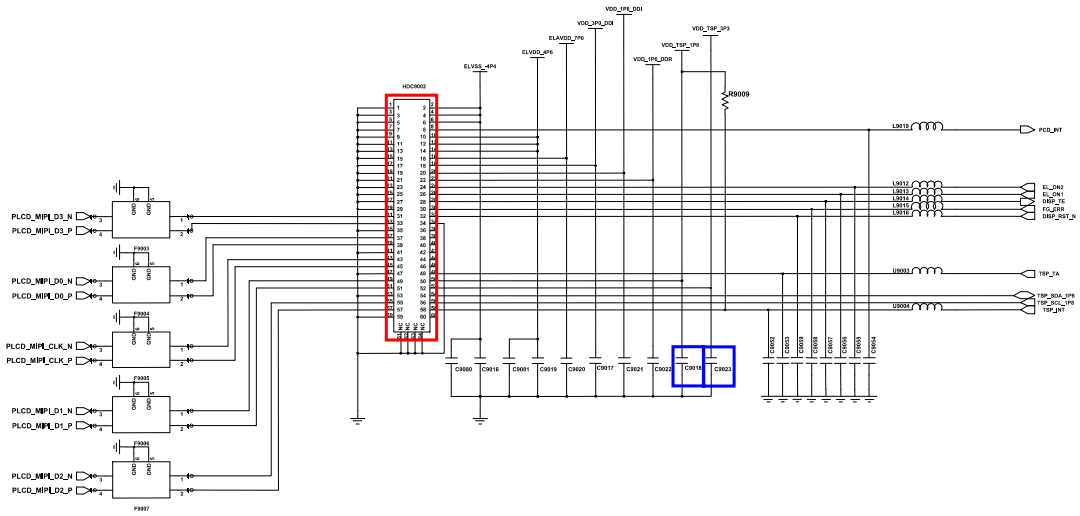

Confidential and proprietary-the contents in this service guide subject to change without prior notice.
Distribution, transmission, or infringement of any content or data from this document without Samsung's written authorization is strictly prohibited.

8-3-19. 马达

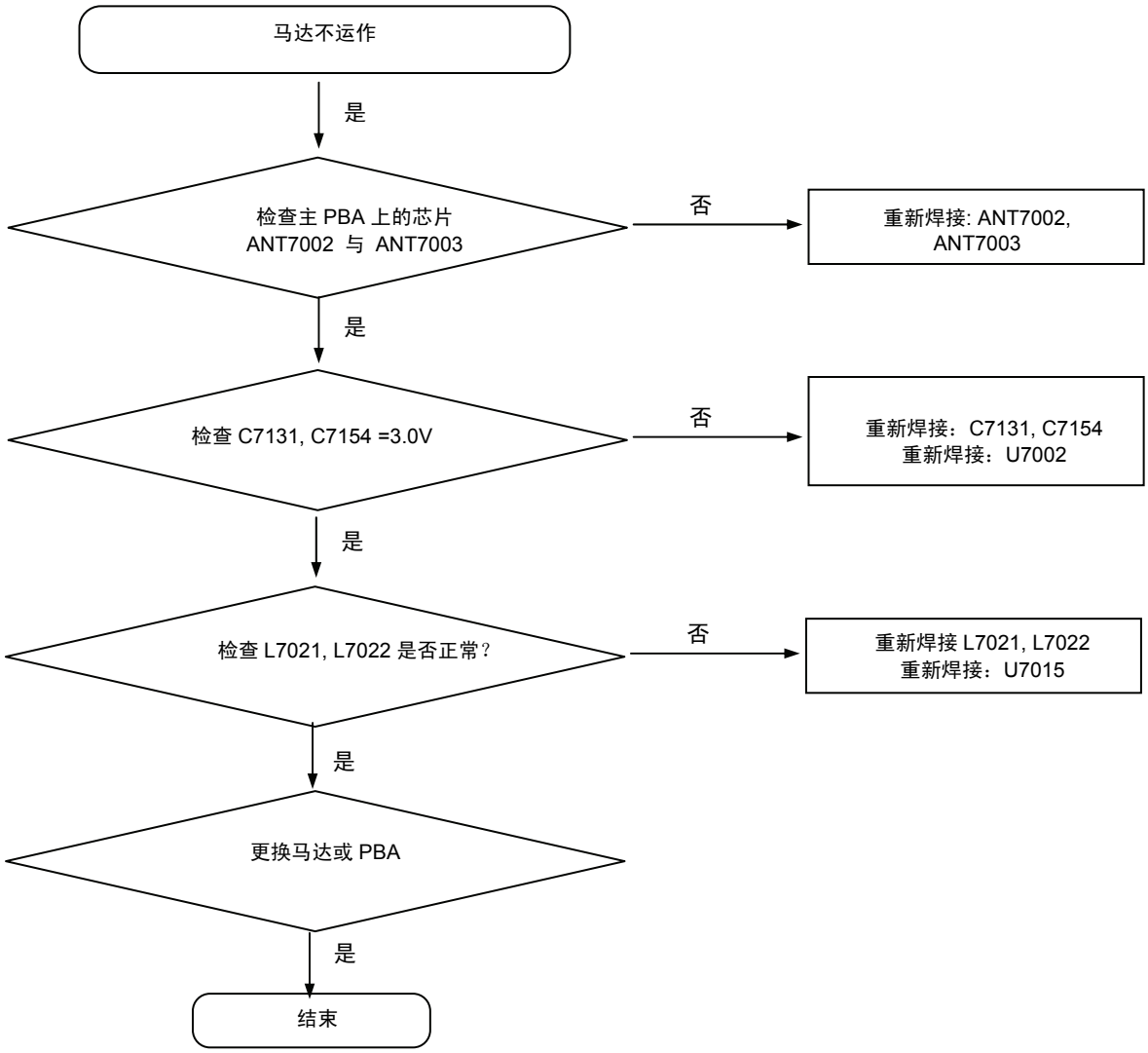

保密和所有权-本维修手册内容的变更恕不另行通知。
未经三星书面授权而发布，传送，或违背本文件中的任何内容或数据是严格禁止的。

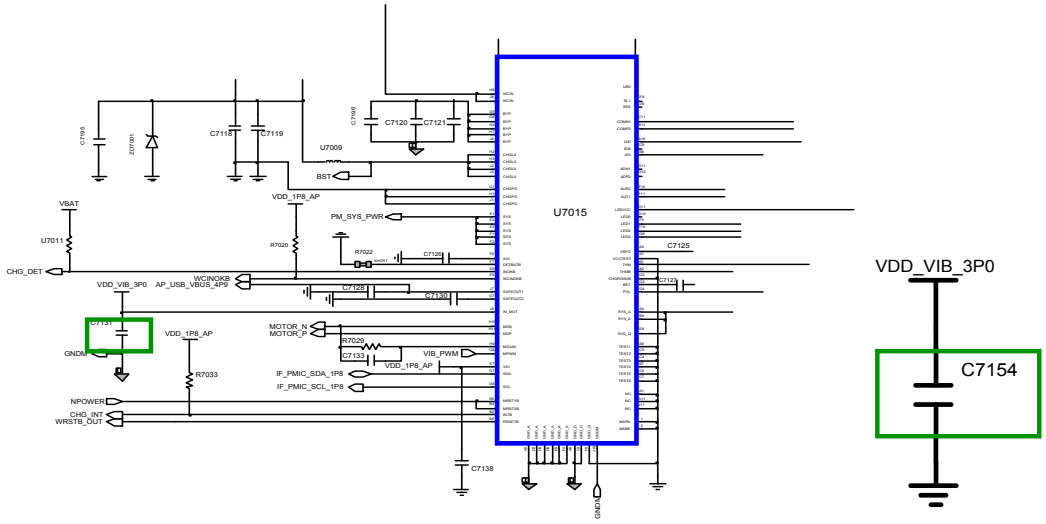

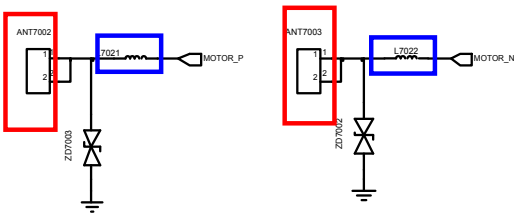

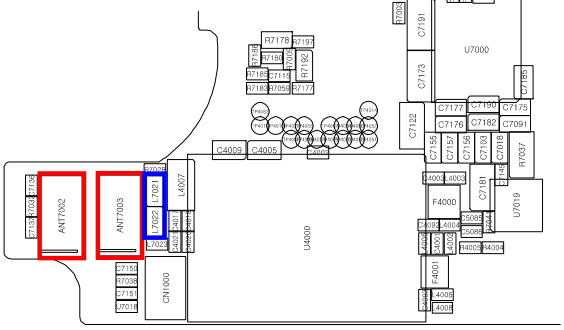

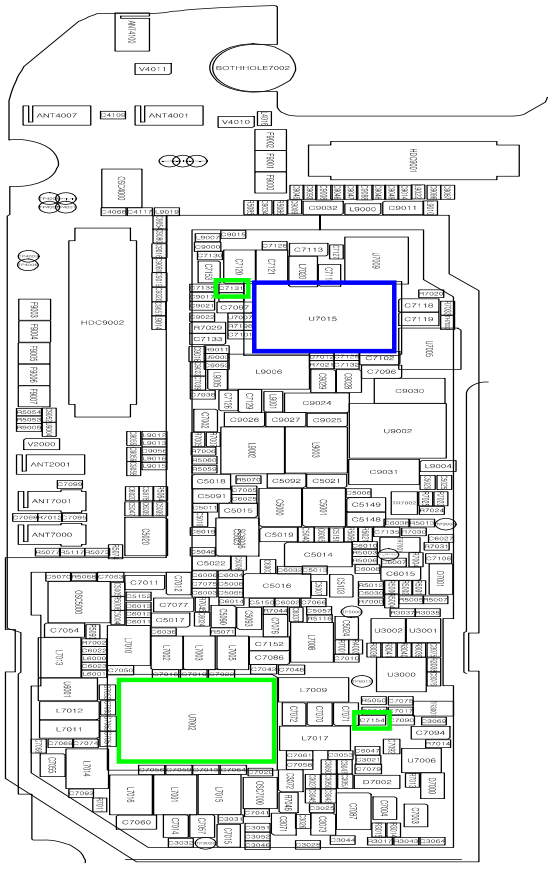

Confidential and proprietary-the contents in this service guide subject to change without prior notice.
Distribution, transmission, or infringement of any content or data from this document without Samsung's written authorization is strictly prohibited.

8-3-20. WCDMA 1 / LTE 1 Rx

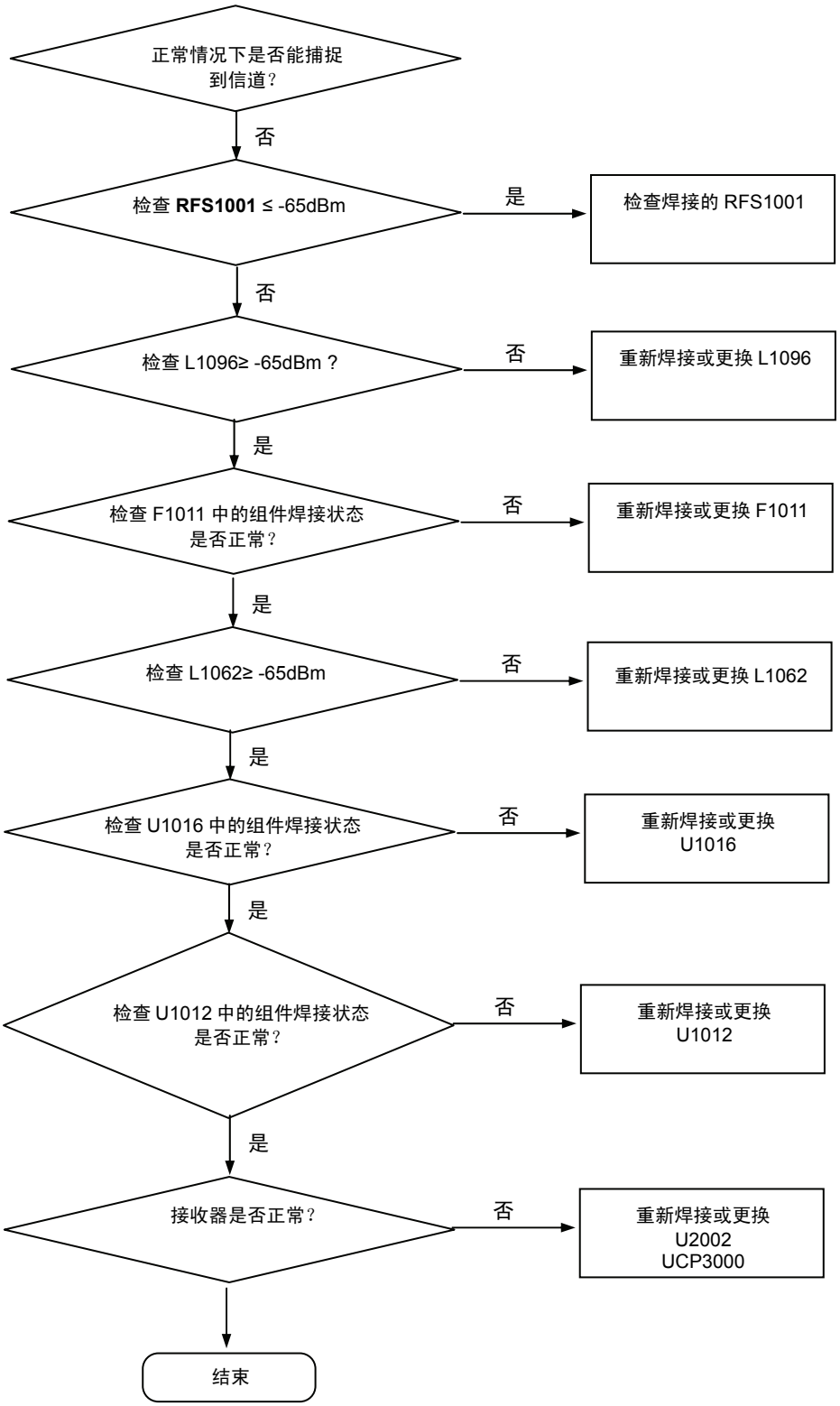

保密和所有权-本维修手册内容的变更恕不另行通知。
未经三星书面授权而发布，传送，或违背本文件中的任何内容或数据是严格禁止的。

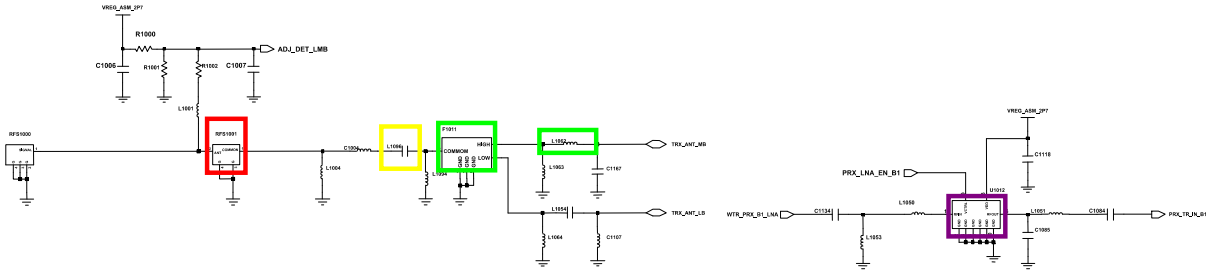

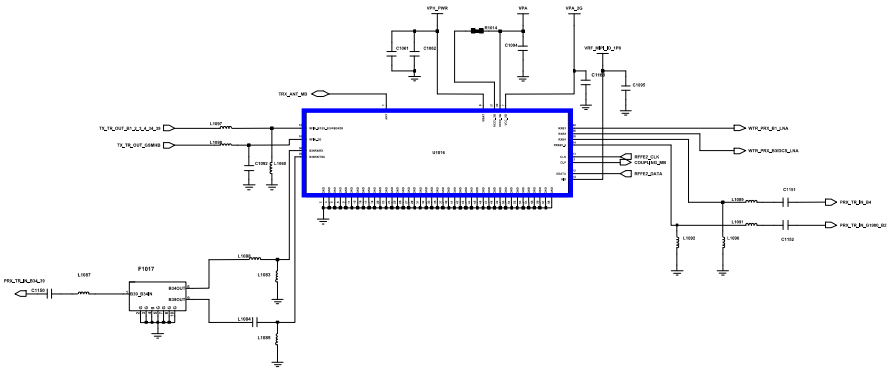

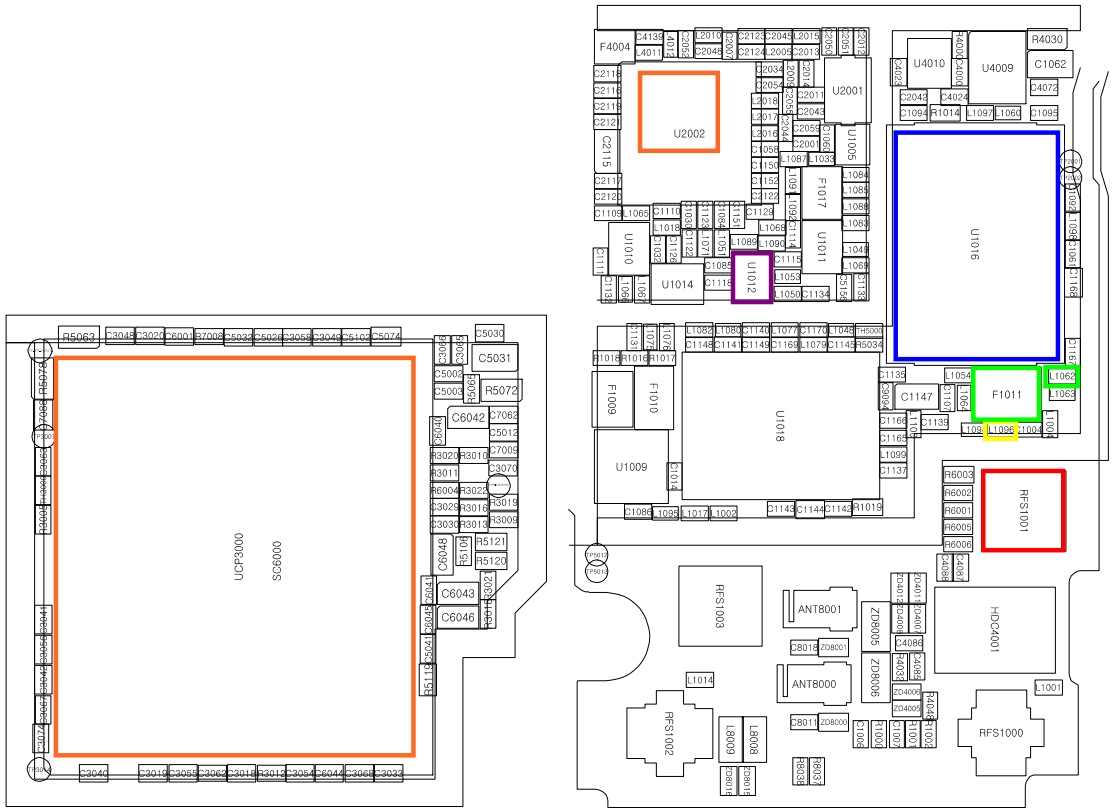

Confidential and proprietary-the contents in this service guide subject to change without prior notice.
Distribution, transmission, or infringement of any content or data from this document without Samsung's written authorization is strictly prohibited.

8-3-21. GSM1900 / WCDMA 2 Rx

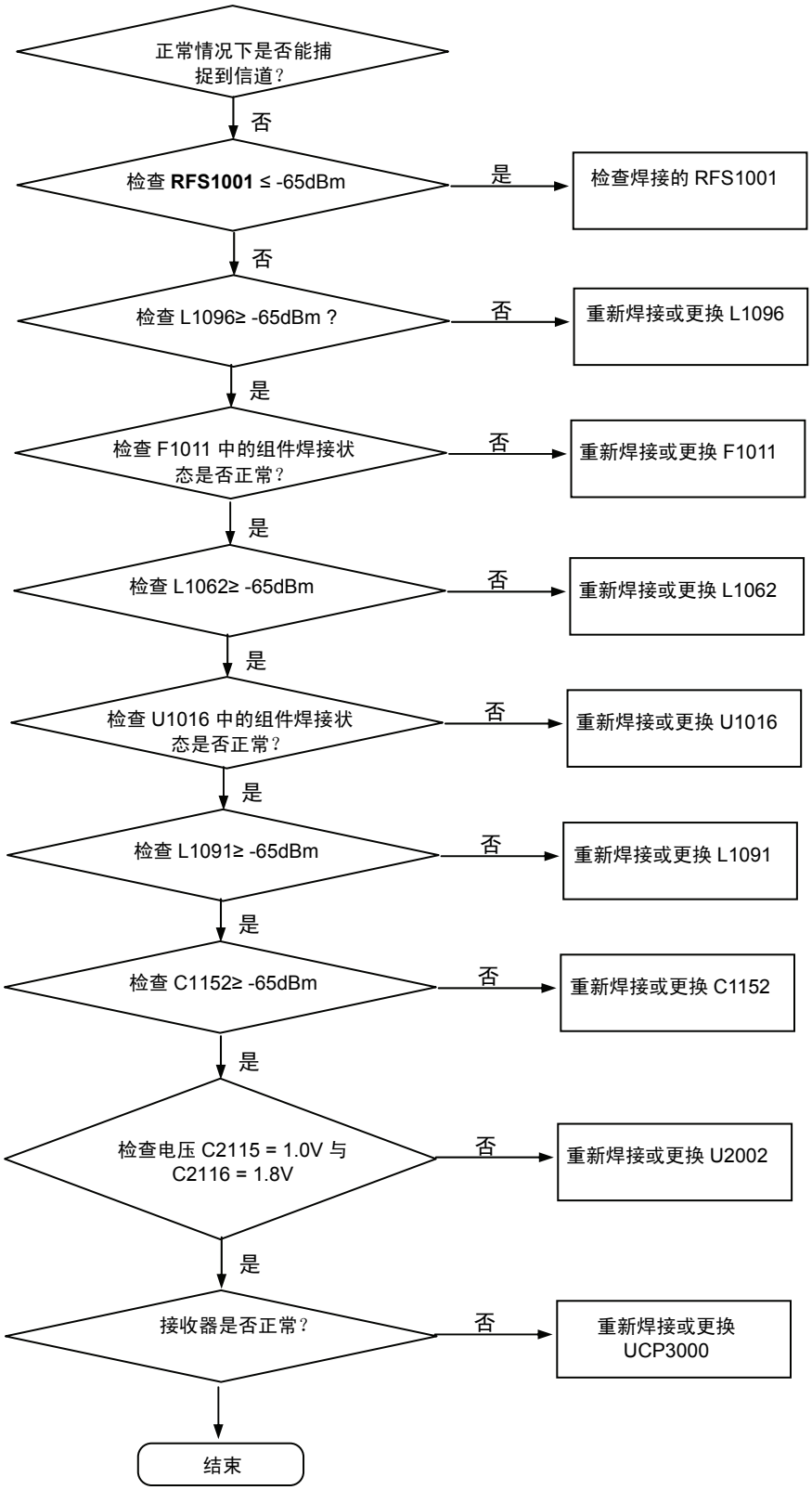

保密和所有权-本维修手册内容的变更恕不另行通知。
未经三星书面授权而发布，传送，或违背本文件中的任何内容或数据是严格禁止的。

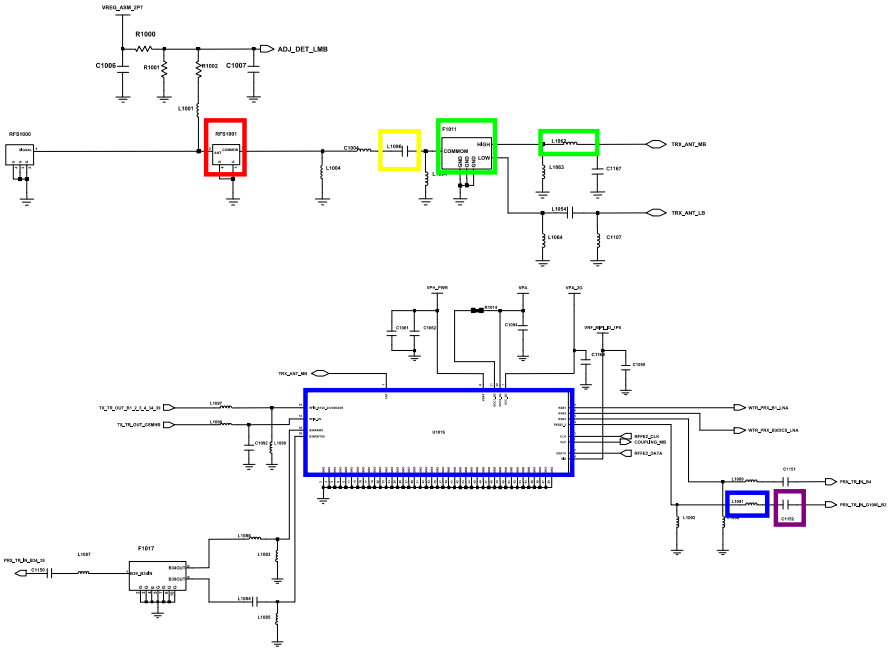

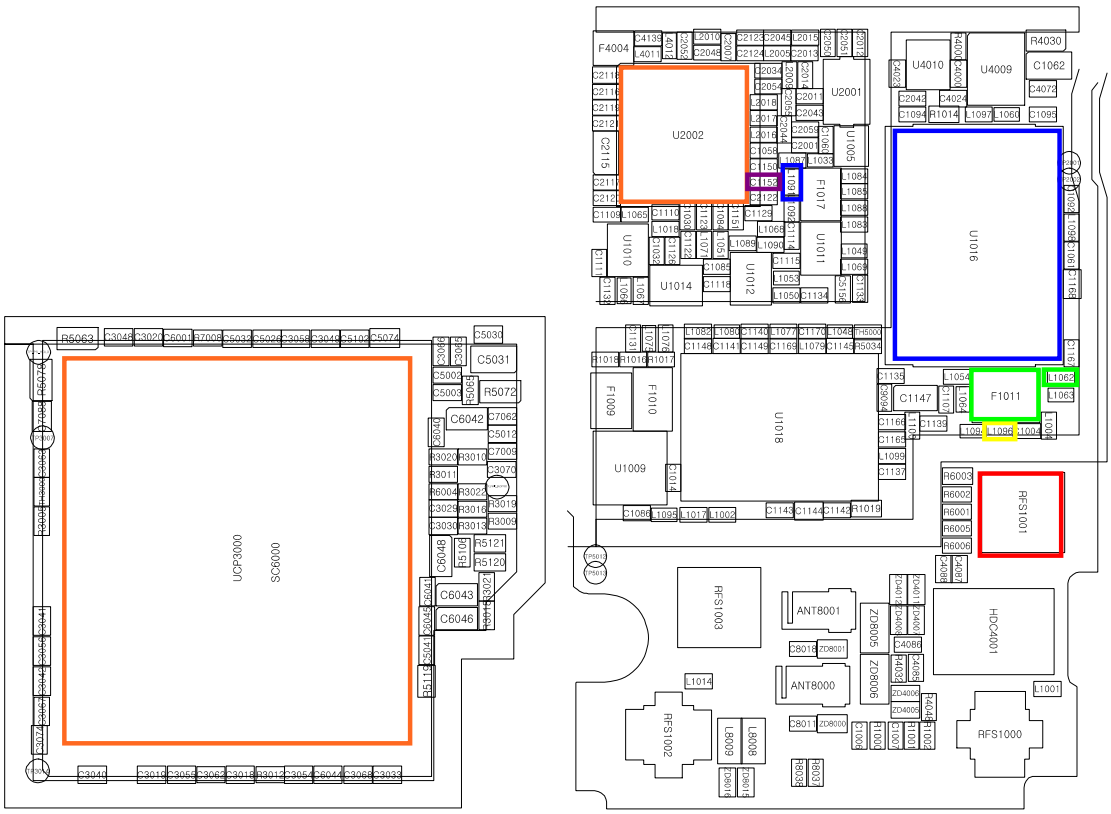

Confidential and proprietary-the contents in this service guide subject to change without prior notice.
Distribution, transmission, or infringement of any content or data from this document without Samsung's written authorization is strictly prohibited.

8-3-22. GSM1800 / LTE 3 Rx

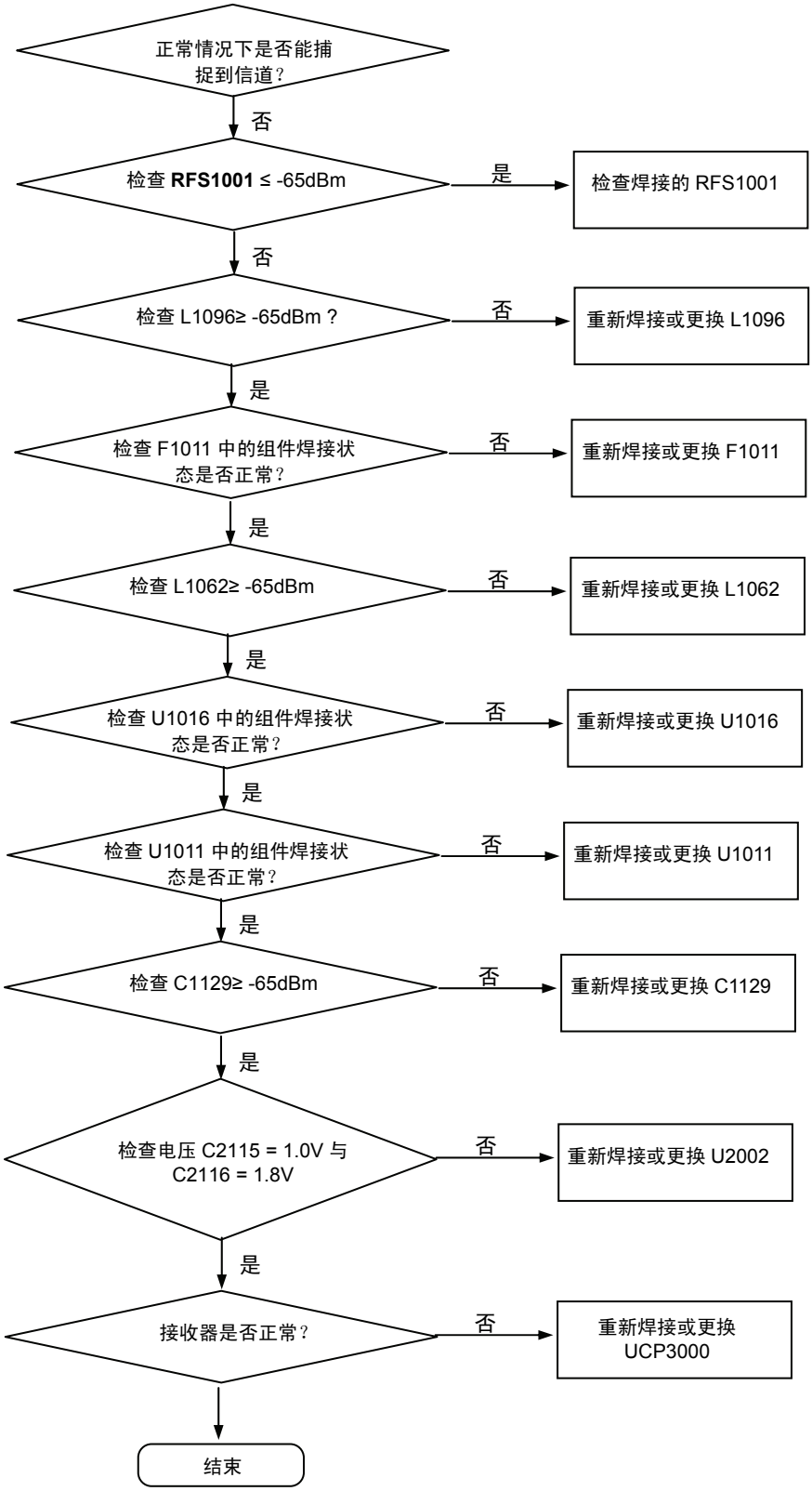

保密和所有权-本维修手册内容的变更恕不另行通知。
未经三星书面授权而发布，传送，或违背本文件中的任何内容或数据是严格禁止的。

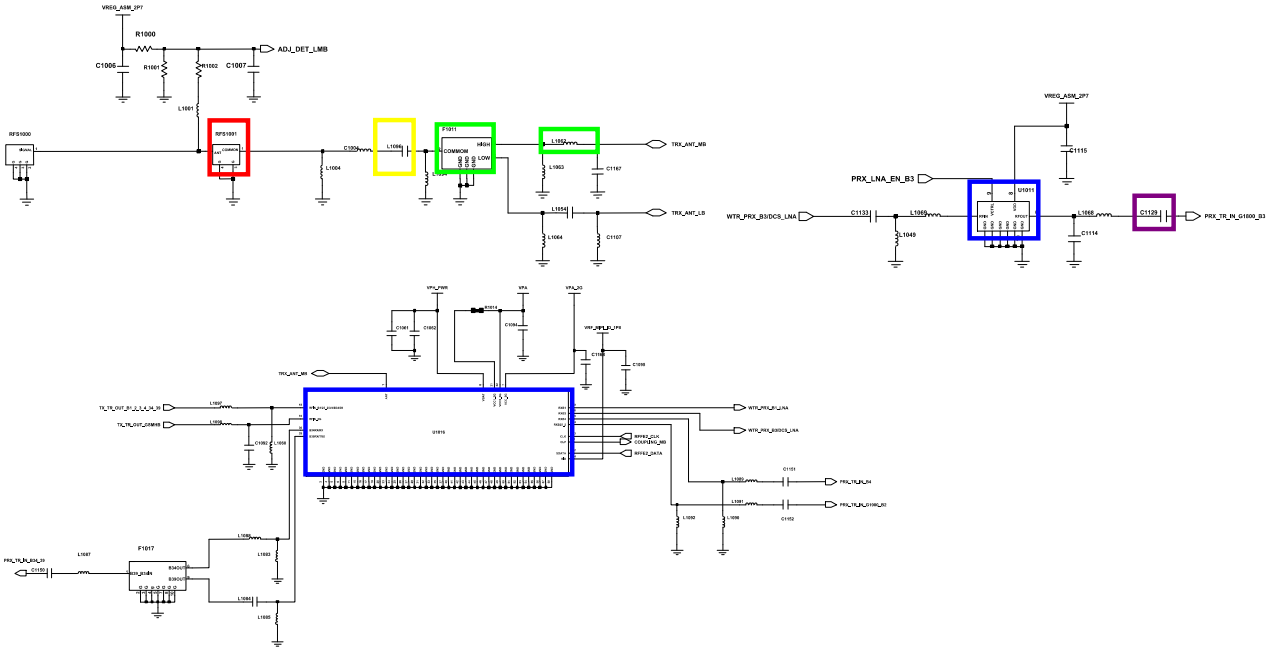

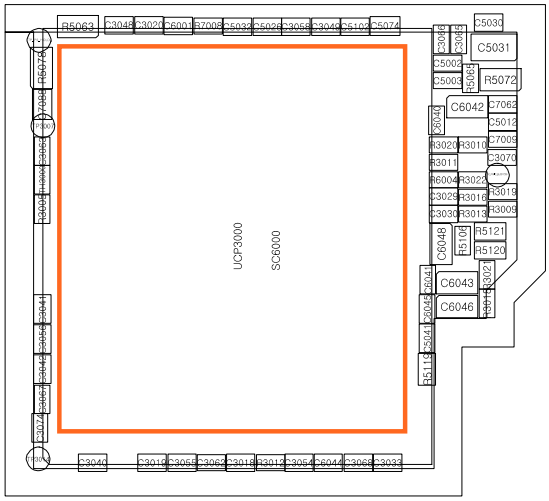

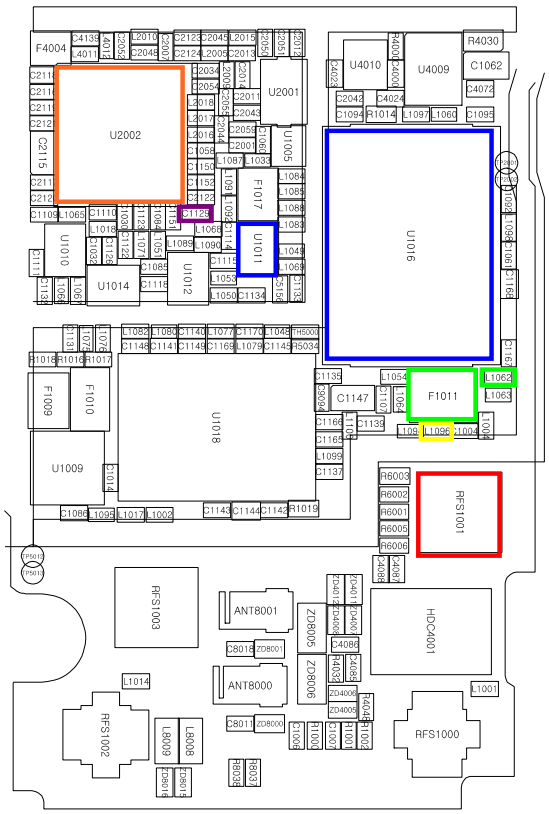

Confidential and proprietary-the contents in this service guide subject to change without prior notice.
Distribution, transmission, or infringement of any content or data from this document without Samsung's written authorization is strictly prohibited.

8-3-23. LTE 4 Rx

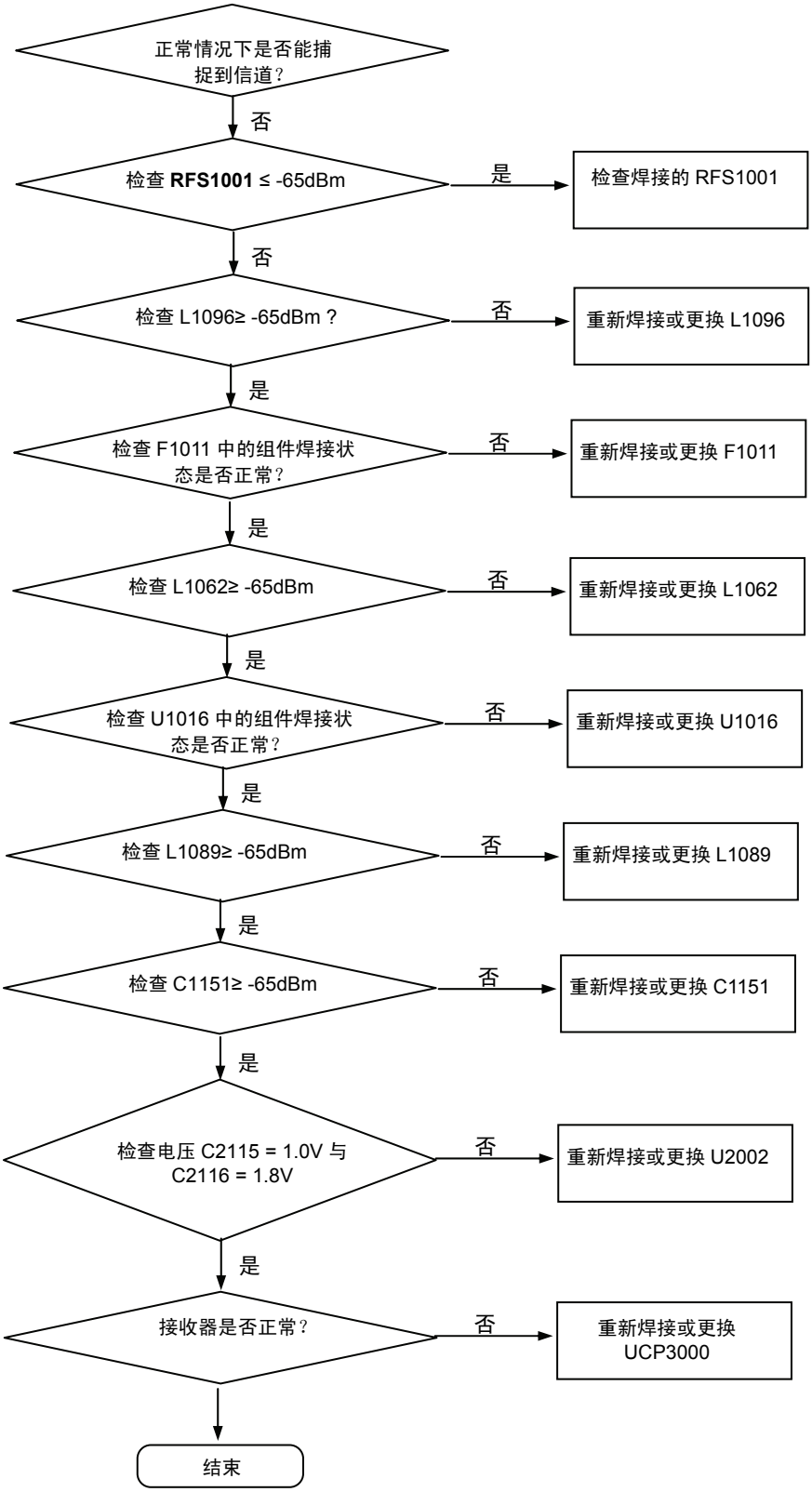

保密和所有权-本维修手册内容的变更恕不另行通知。
未经三星书面授权而发布，传送，或违背本文件中的任何内容或数据是严格禁止的。

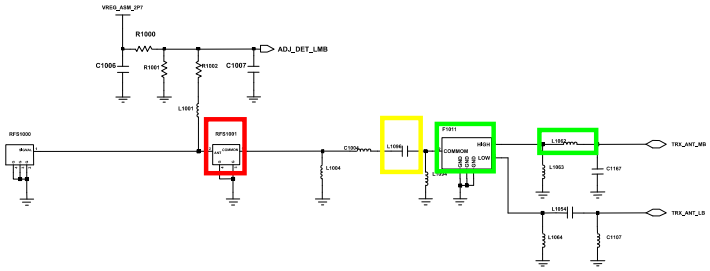

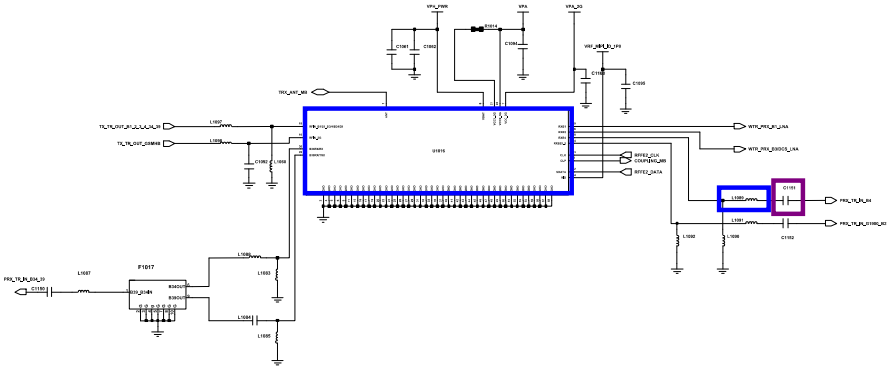

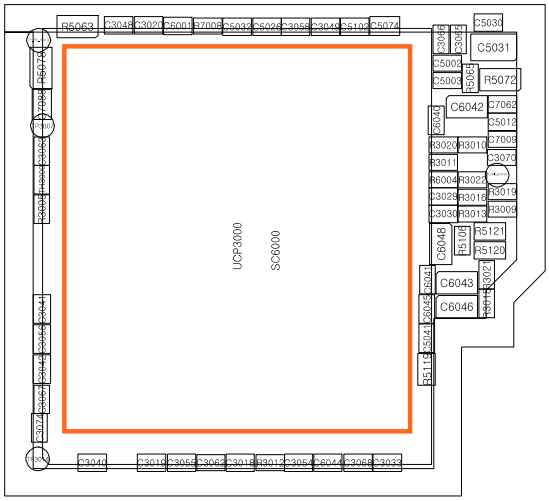

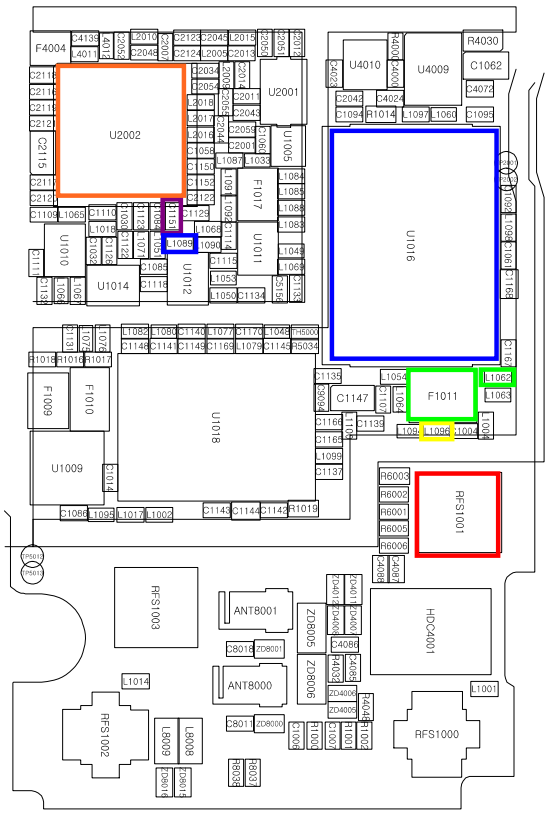

Confidential and proprietary-the contents in this service guide subject to change without prior notice.
Distribution, transmission, or infringement of any content or data from this document without Samsung's written authorization is strictly prohibited.

8-3-24. GSM850 / WCDMA 5 / CDMA BC0 Rx

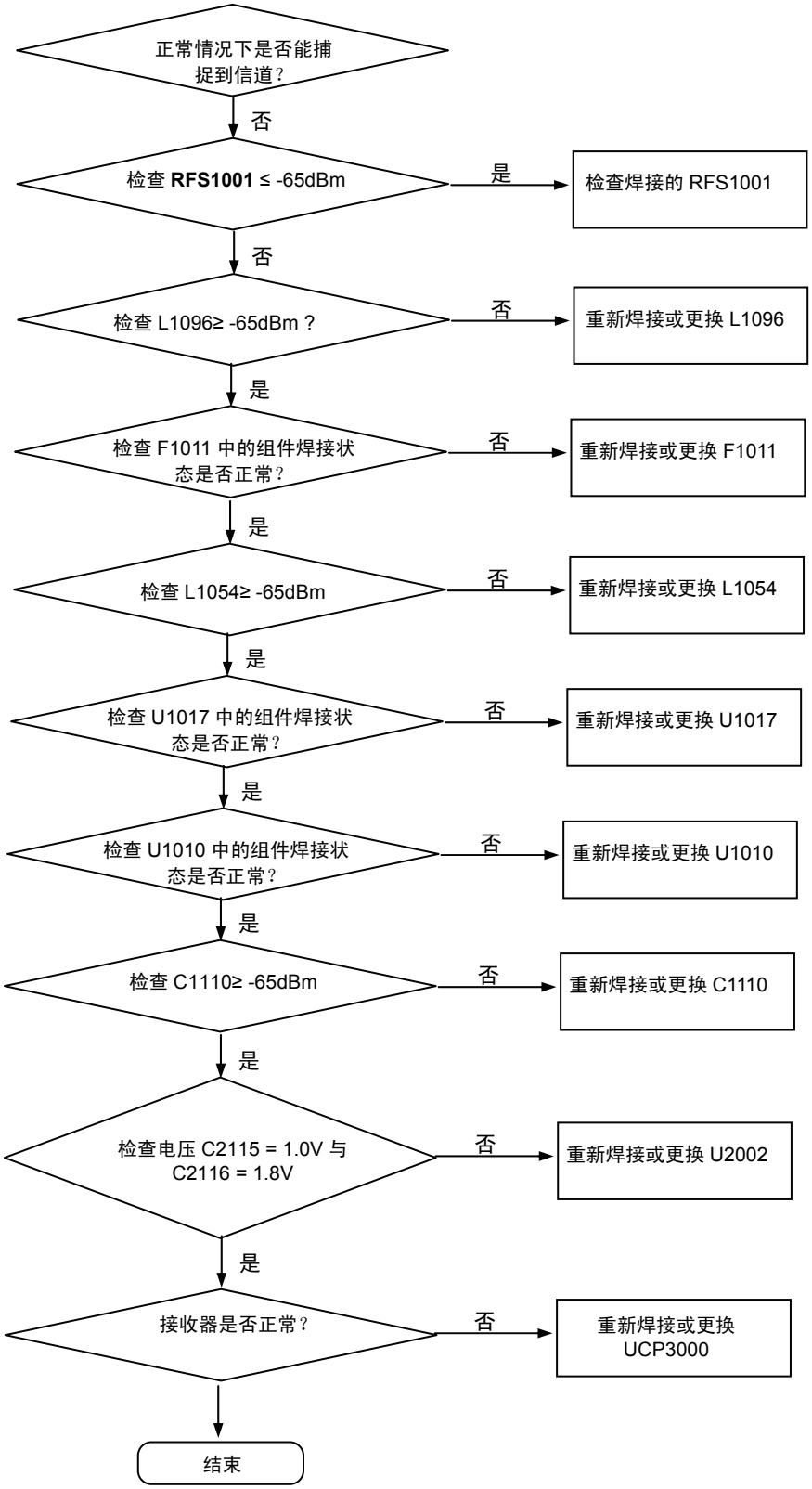

保密和所有权-本维修手册内容的变更恕不另行通知。
未经三星书面授权而发布，传送，或违背本文件中的任何内容或数据是严格禁止的。

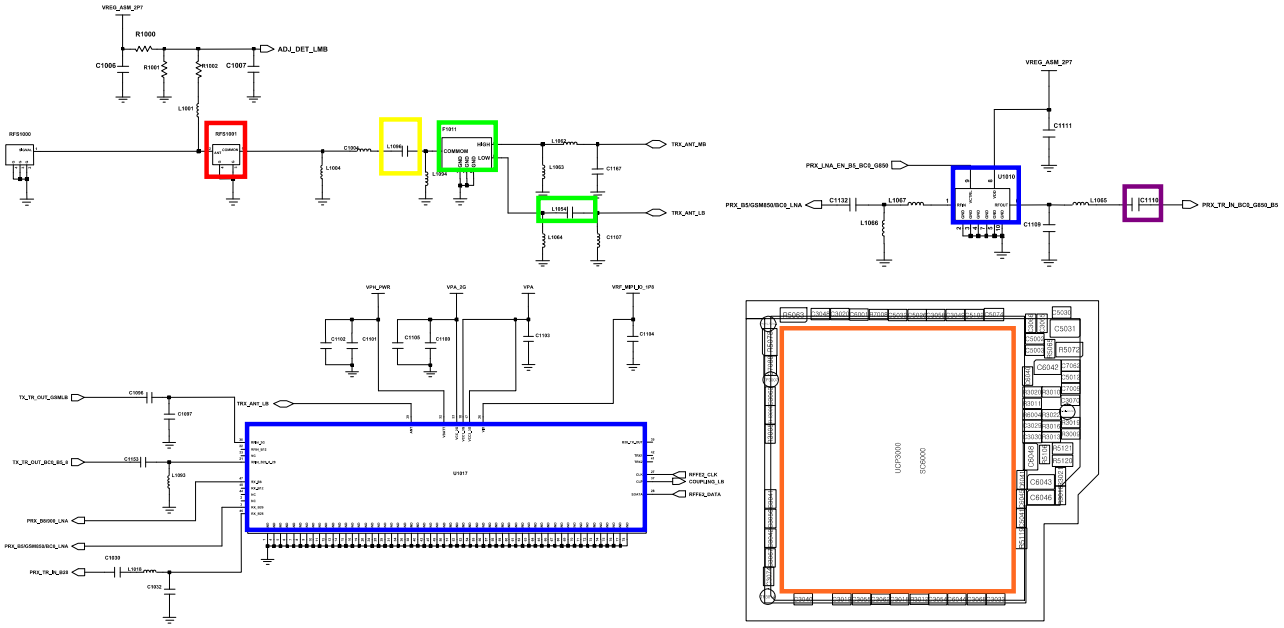

Confidential and proprietary-the contents in this service guide subject to change without prior notice.
Distribution, transmission, or infringement of any content or data from this document without Samsung's written authorization is strictly prohibited.

8-3-25. GSM900 / WCDMA 8 / LTE 8 Rx

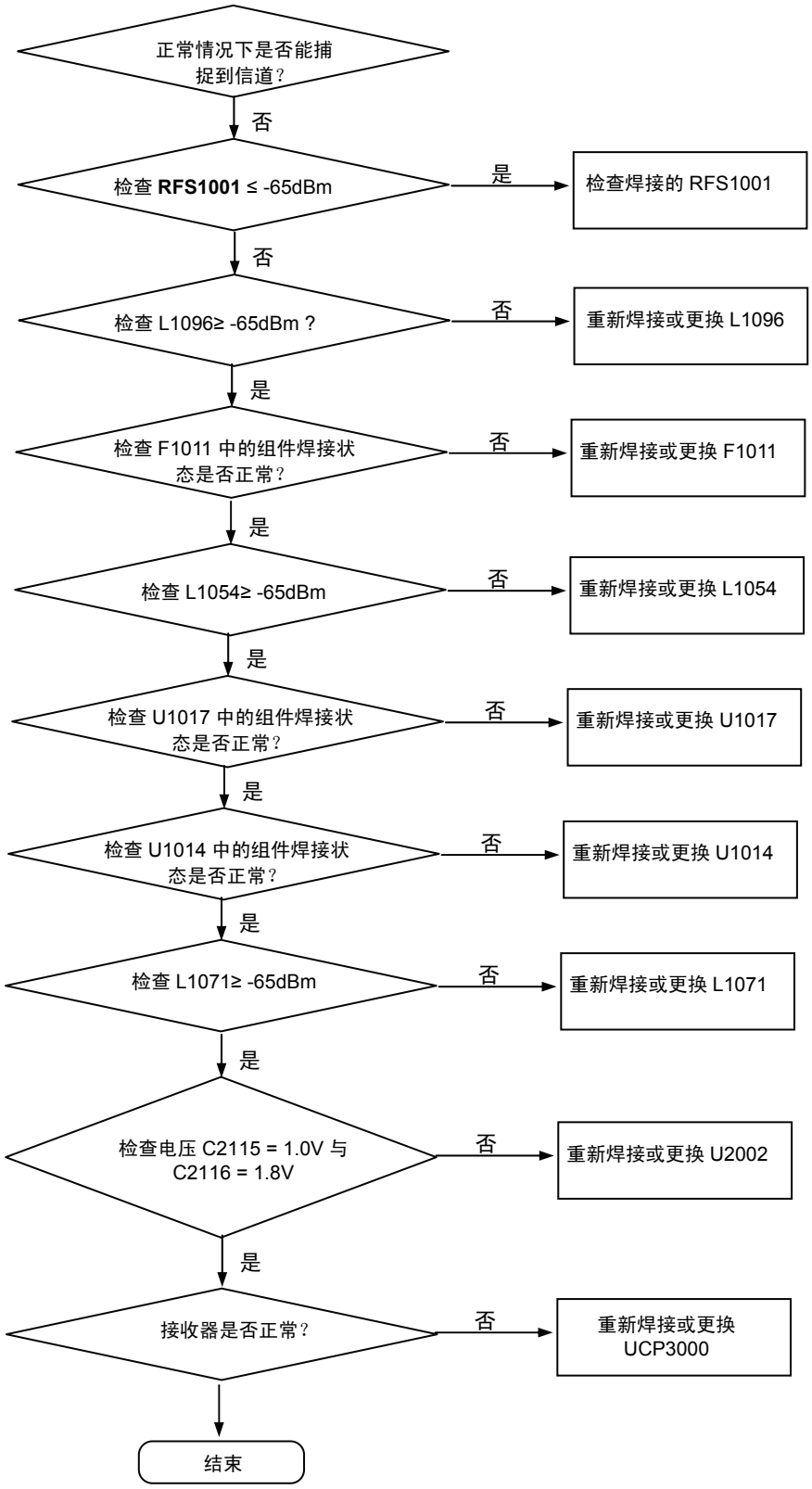

保密和所有权-本维修手册内容的变更恕不另行通知。
未经三星书面授权而发布，传送，或违背本文件中的任何内容或数据是严格禁止的。

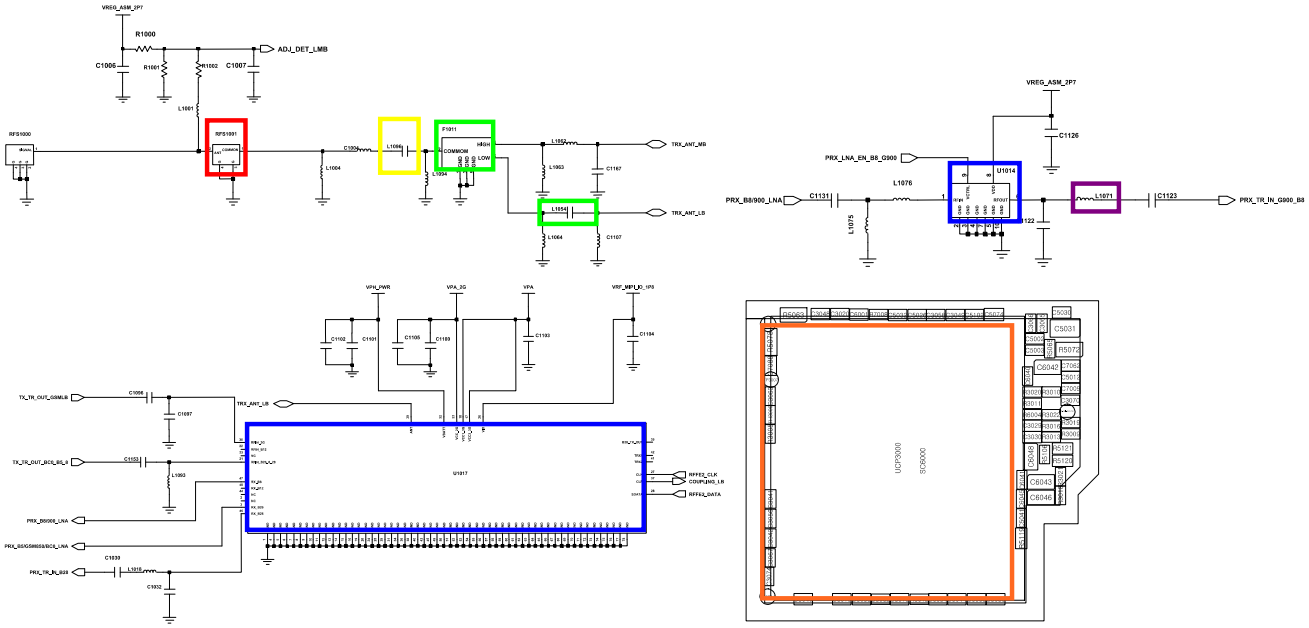

Confidential and proprietary-the contents in this service guide subject to change without prior notice.
Distribution, transmission, or infringement of any content or data from this document without Samsung's written authorization is strictly prohibited.

8-3-26. TD-SCMDA 34,39 / LTE 39 Rx

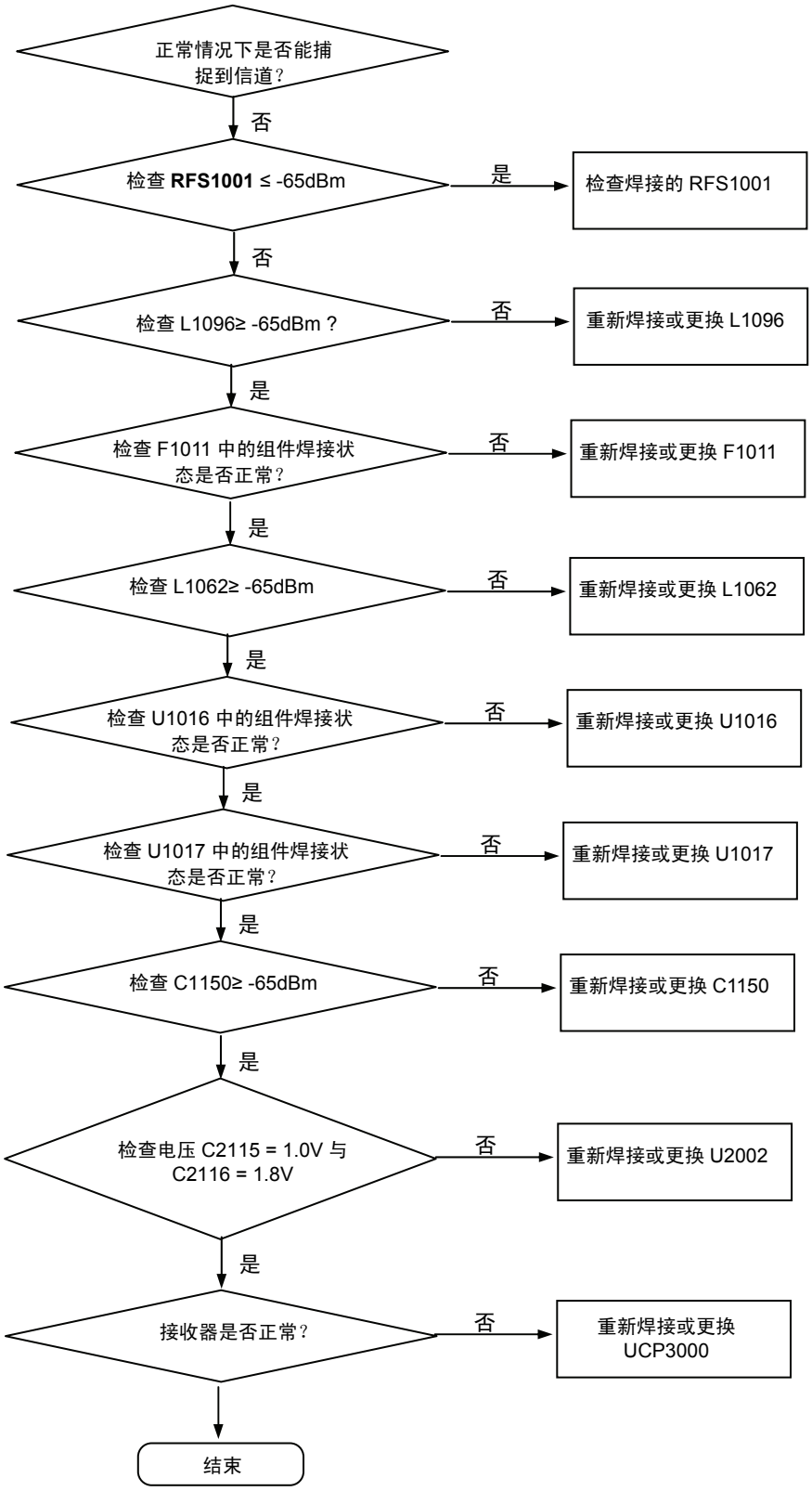

保密和所有权-本维修手册内容的变更恕不另行通知。
未经三星书面授权而发布，传送，或违背本文件中的任何内容或数据是严格禁止的。

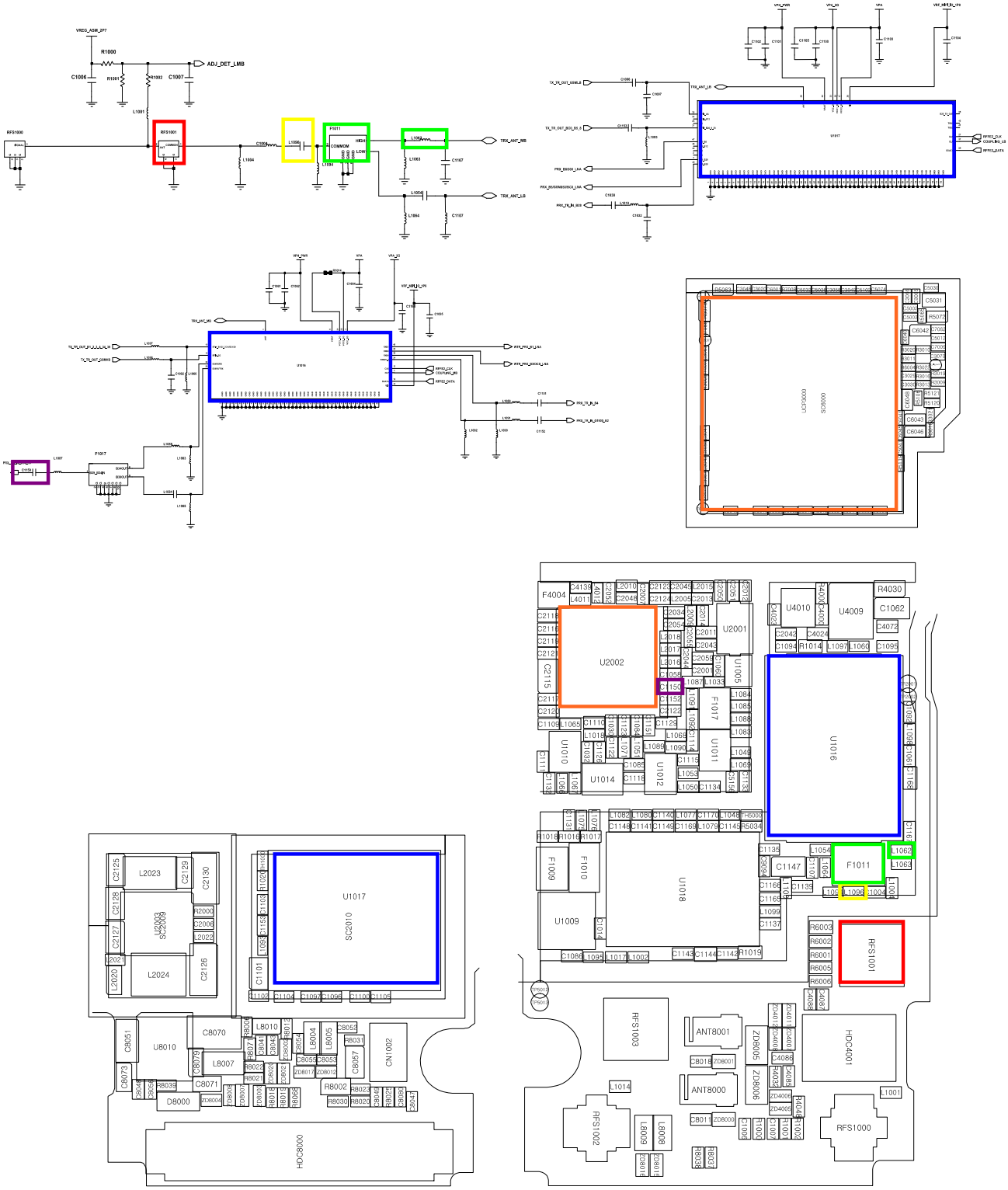

Confidential and proprietary-the contents in this service guide subject to change without prior notice.
Distribution, transmission, or infringement of any content or data from this document without Samsung's written authorization is strictly prohibited.

8-3-27. LTE 28 Rx

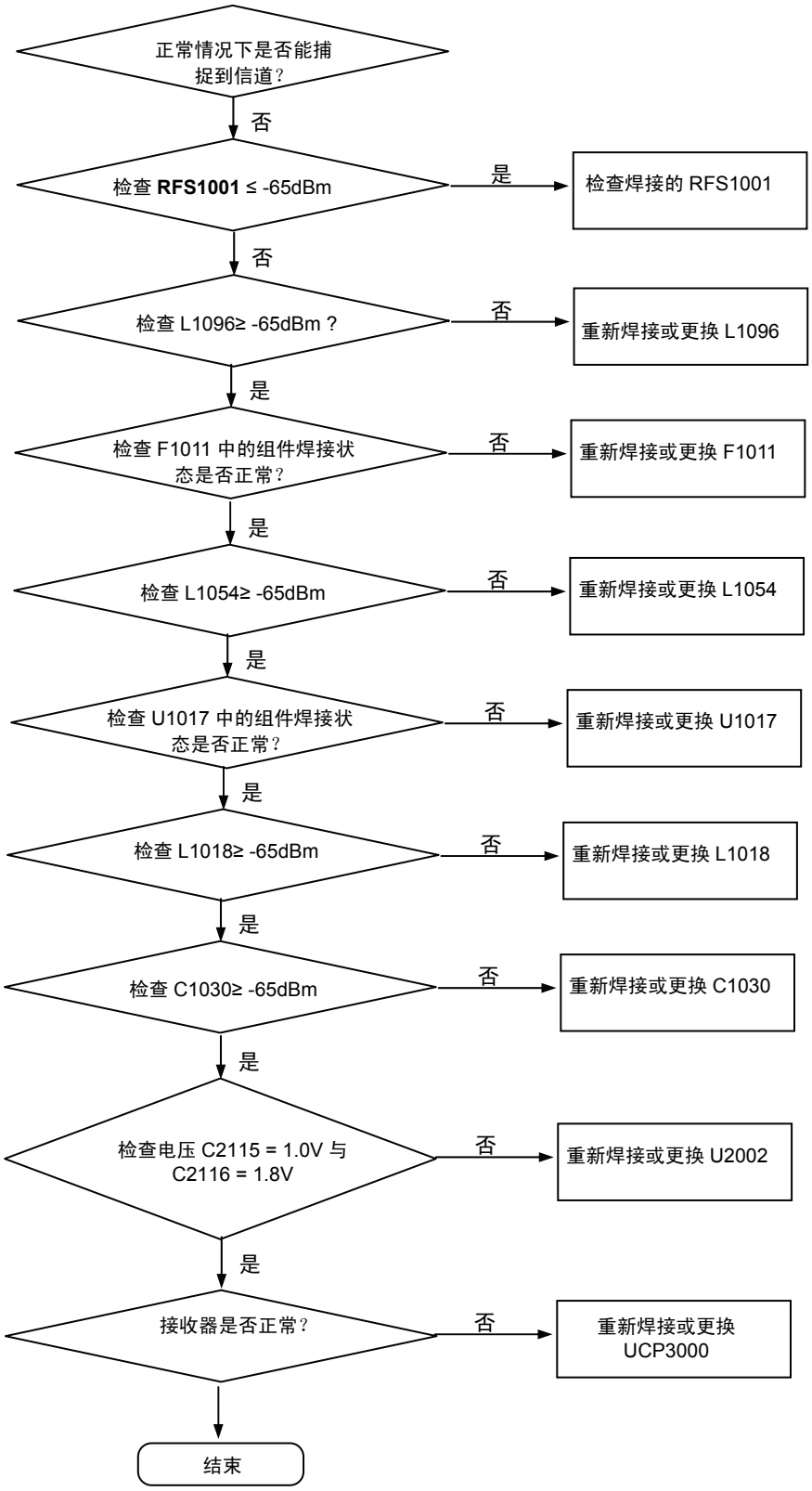

保密和所有权-本维修手册内容的变更恕不另行通知。
未经三星书面授权而发布，传送，或违背本文件中的任何内容或数据是严格禁止的。

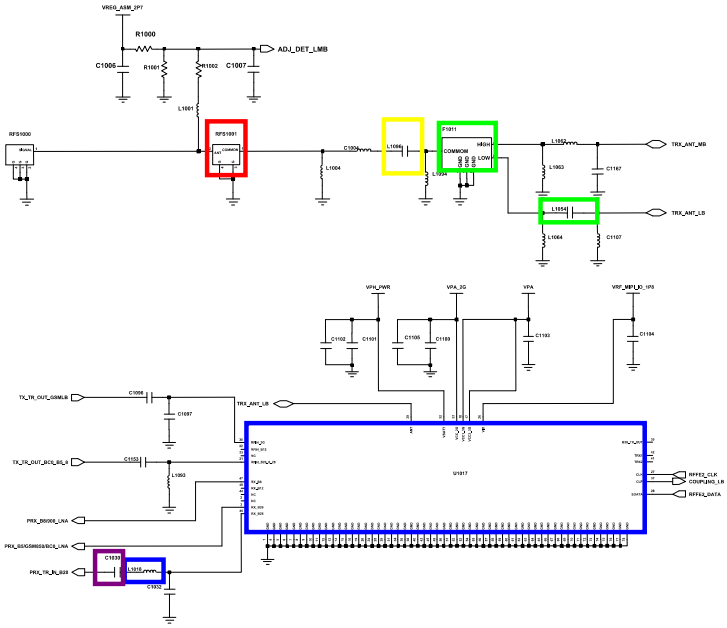

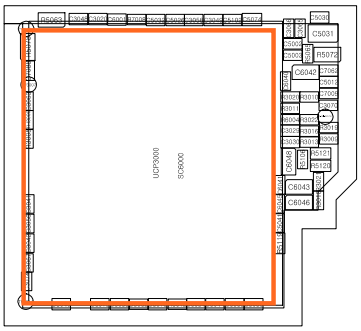

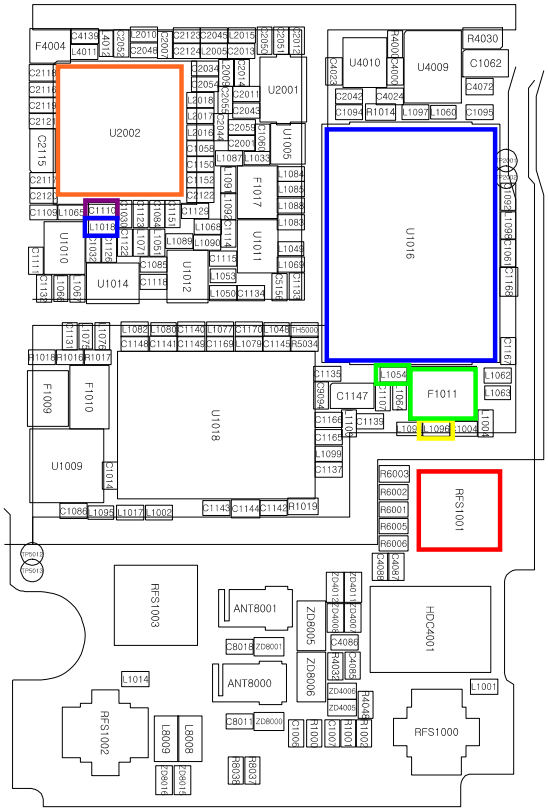

Confidential and proprietary-the contents in this service guide subject to change without prior notice.
Distribution, transmission, or infringement of any content or data from this document without Samsung's written authorization is strictly prohibited.

8-3-28. LTE 7 Rx

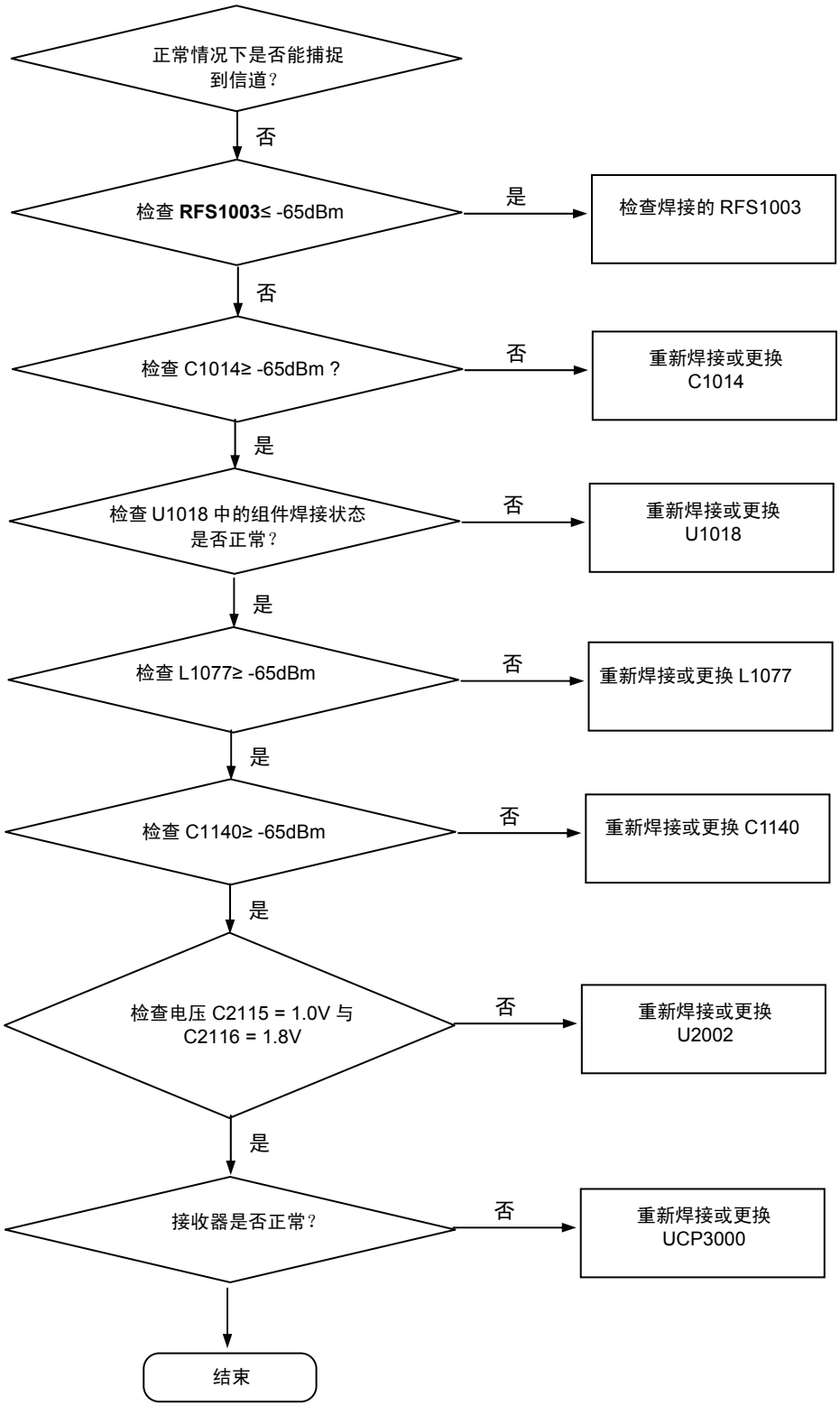

保密和所有权-本维修手册内容的变更恕不另行通知。
未经三星书面授权而发布，传送，或违背本文件中的任何内容或数据是严格禁止的。

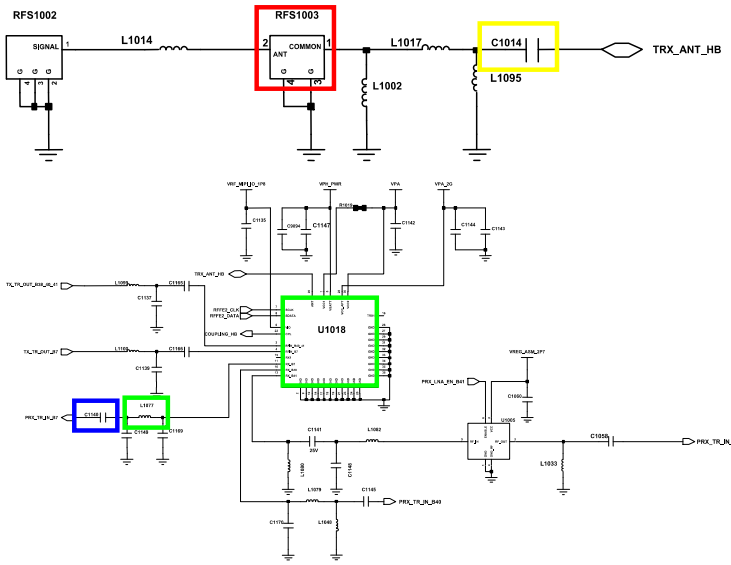

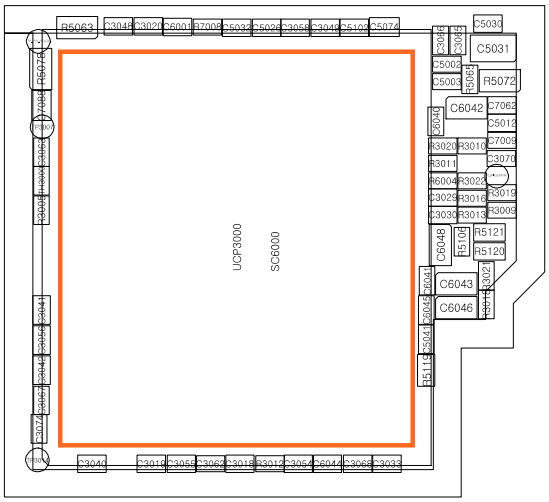

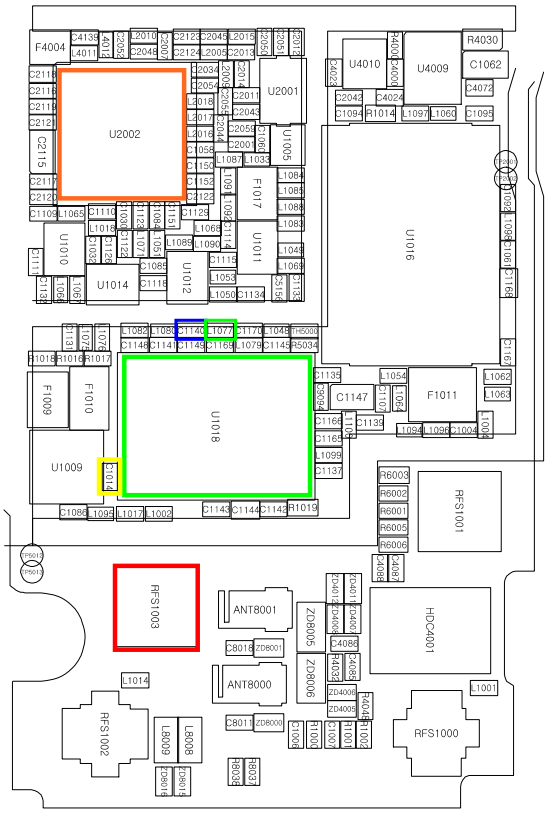

Confidential and proprietary-the contents in this service guide subject to change without prior notice.
Distribution, transmission, or infringement of any content or data from this document without Samsung's written authorization is strictly prohibited.

8-3-29. LTE 40 RX

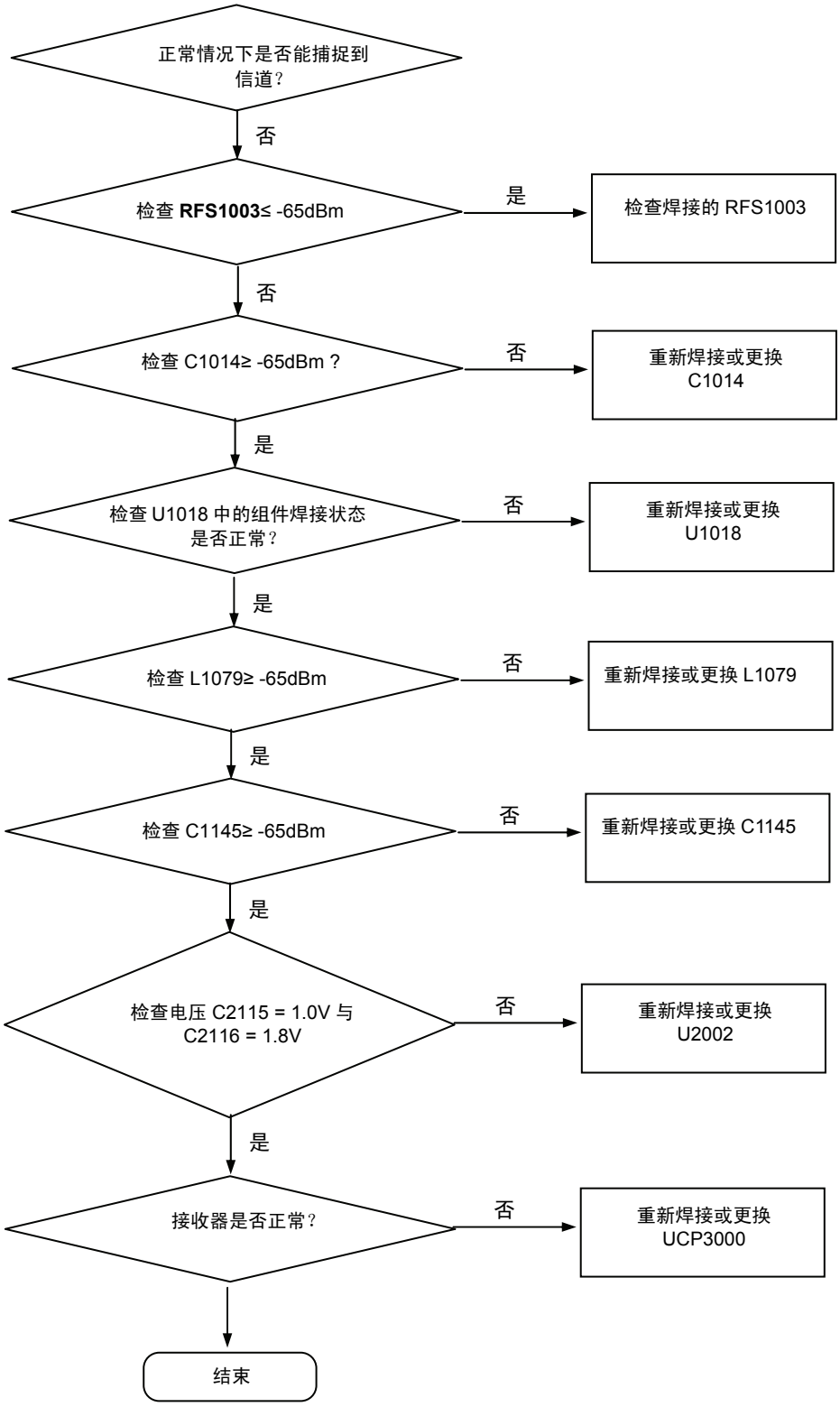

保密和所有权-本维修手册内容的变更恕不另行通知。
未经三星书面授权而发布，传送，或违背本文件中的任何内容或数据是严格禁止的。

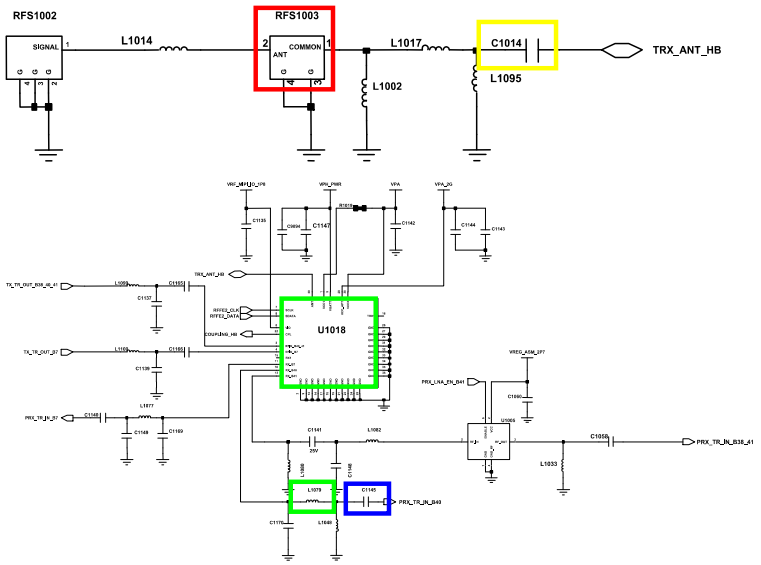

Confidential and proprietary-the contents in this service guide subject to change without prior notice.
Distribution, transmission, or infringement of any content or data from this document without Samsung's written authorization is strictly prohibited.

8-3-30. LTE 38 / 41 RX

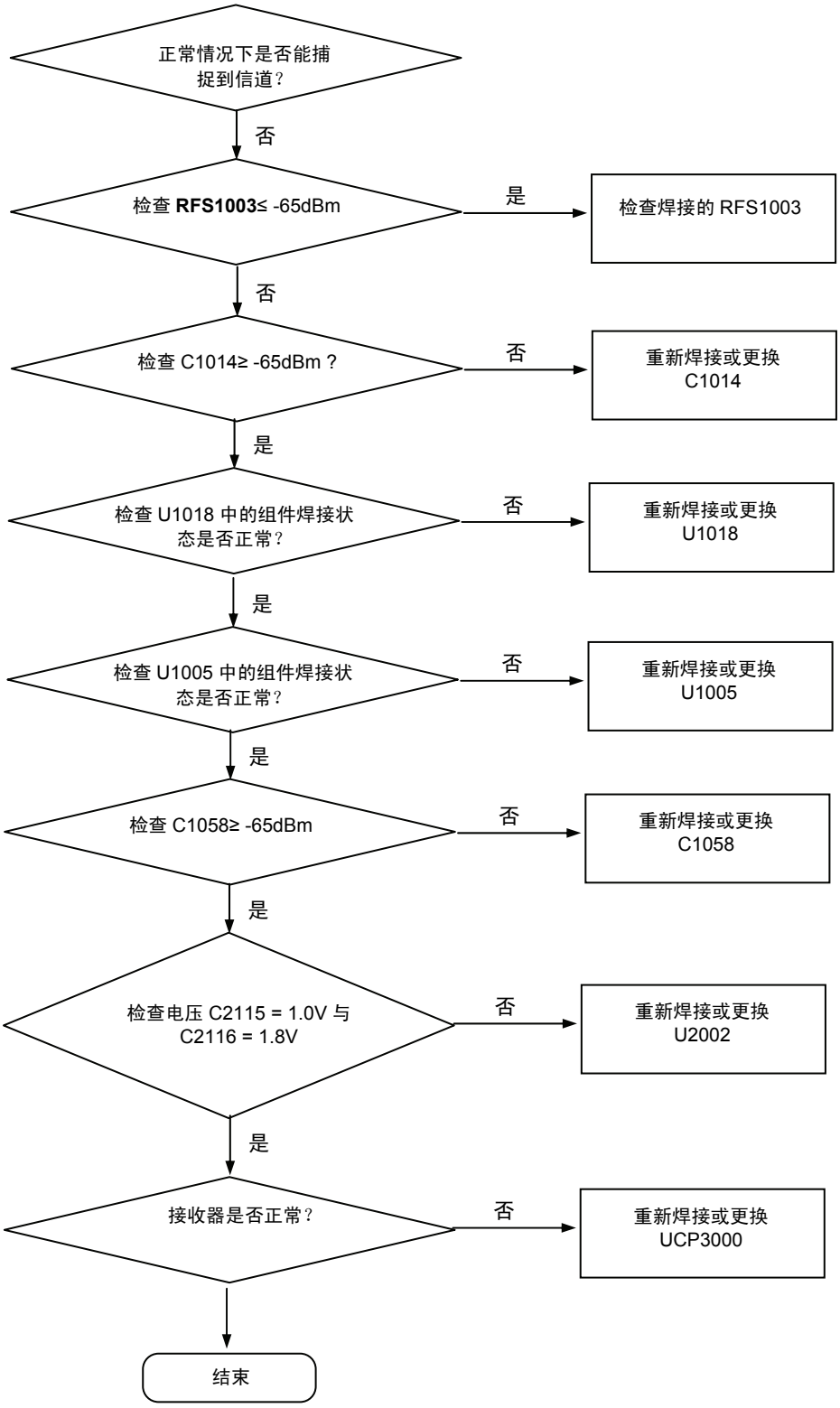

保密和所有权-本维修手册内容的变更恕不另行通知。
未经三星书面授权而发布，传送，或违背本文件中的任何内容或数据是严格禁止的。

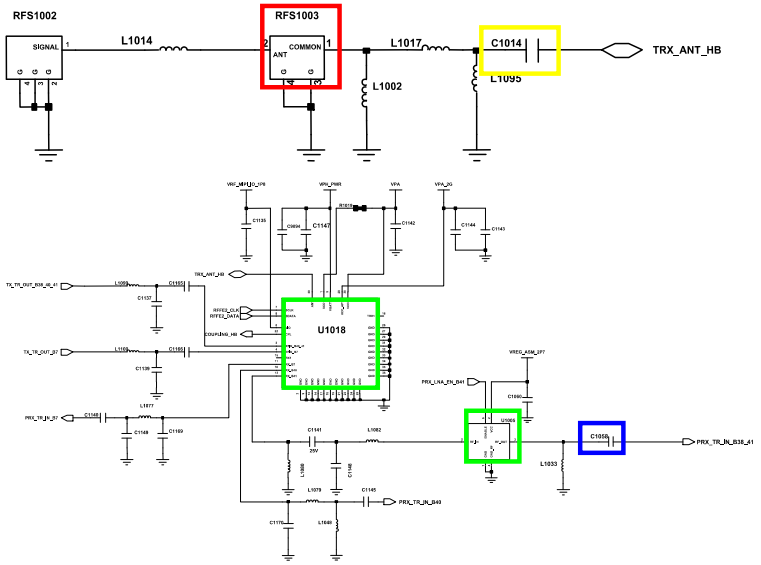

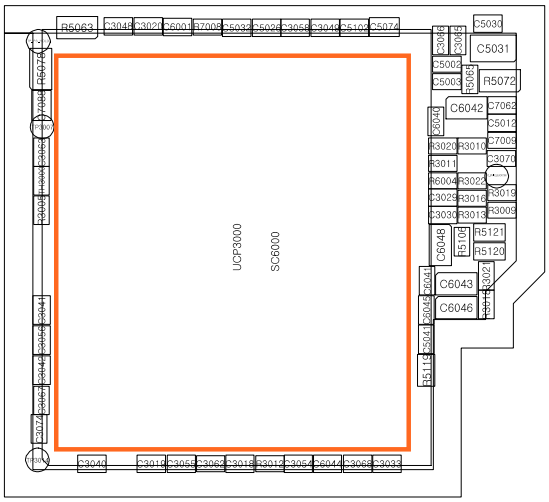

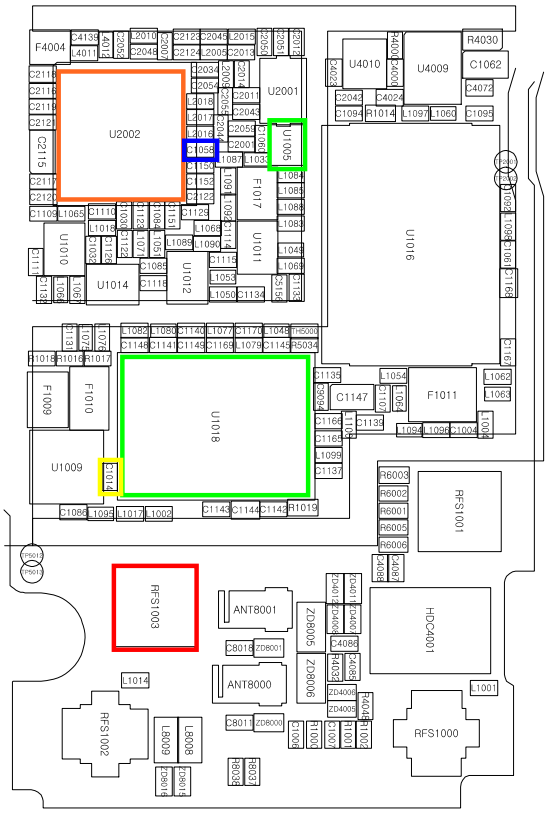

Confidential and proprietary-the contents in this service guide subject to change without prior notice.
Distribution, transmission, or infringement of any content or data from this document without Samsung's written authorization is strictly prohibited.

8-3-31. WCDMA 1, 2 / LTE 1, 3, 4, 39 / TD-SCDMA 34, 39 TX

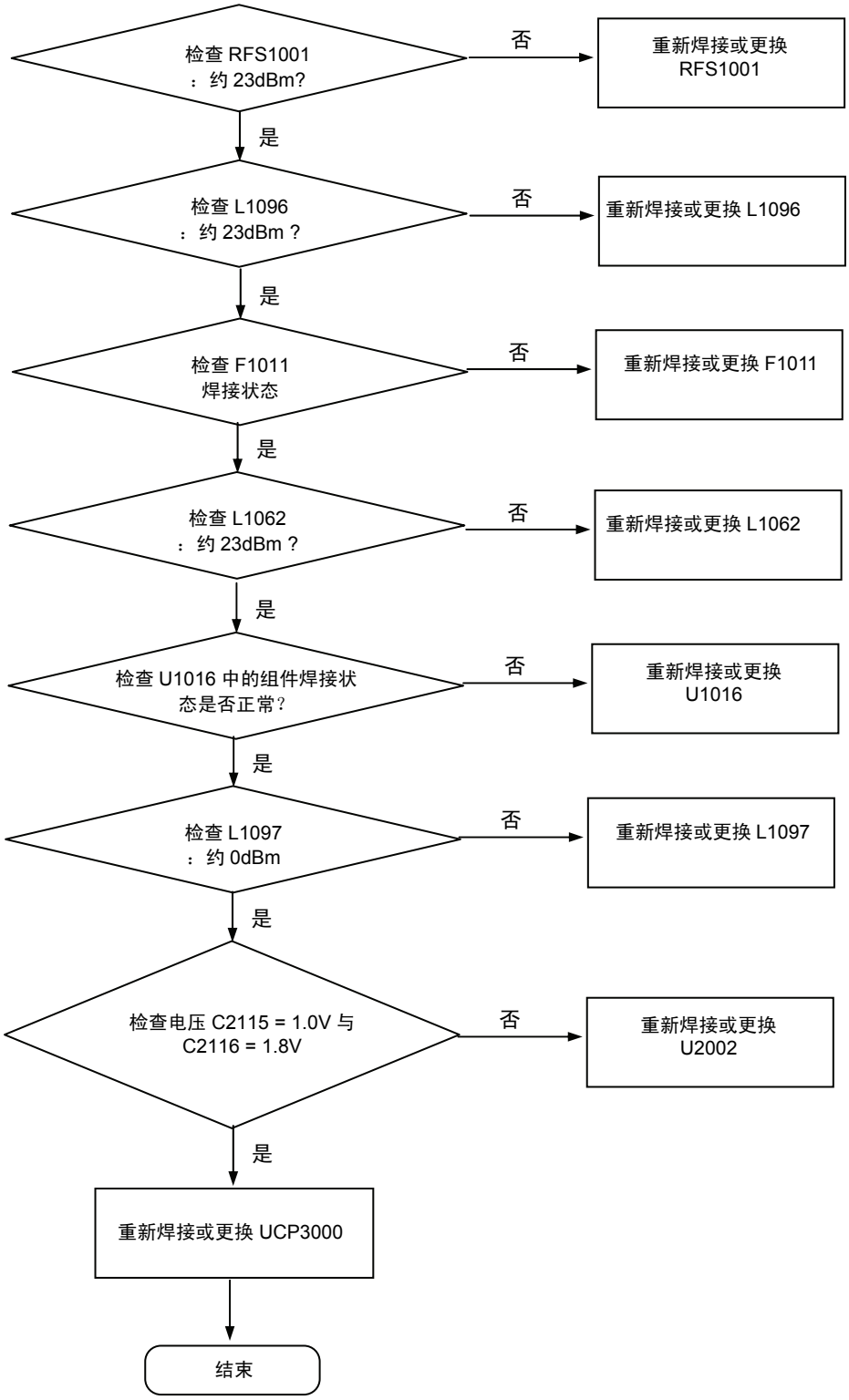

保密和所有权-本维修手册内容的变更恕不另行通知。
未经三星书面授权而发布，传送，或违背本文件中的任何内容或数据是严格禁止的。

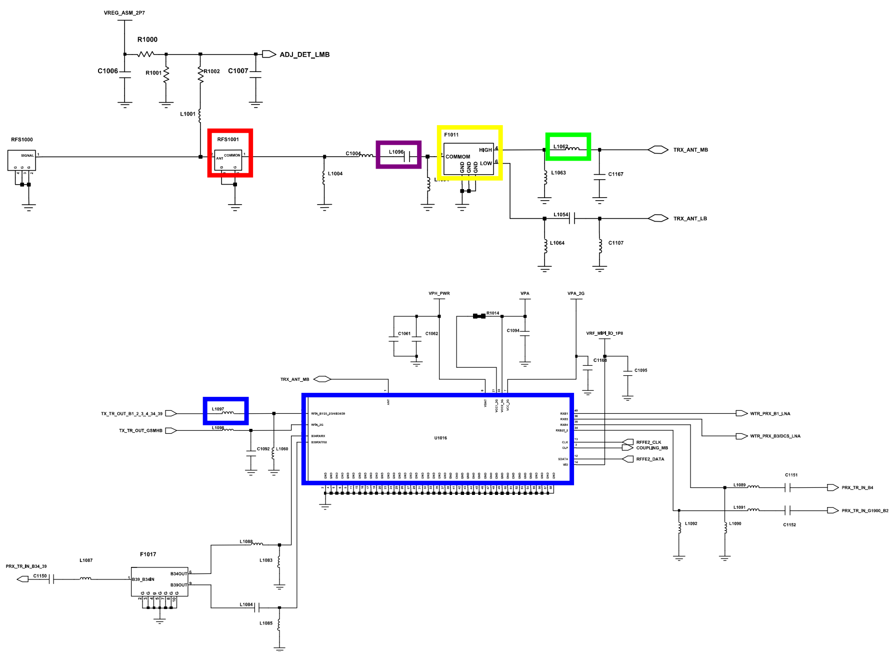

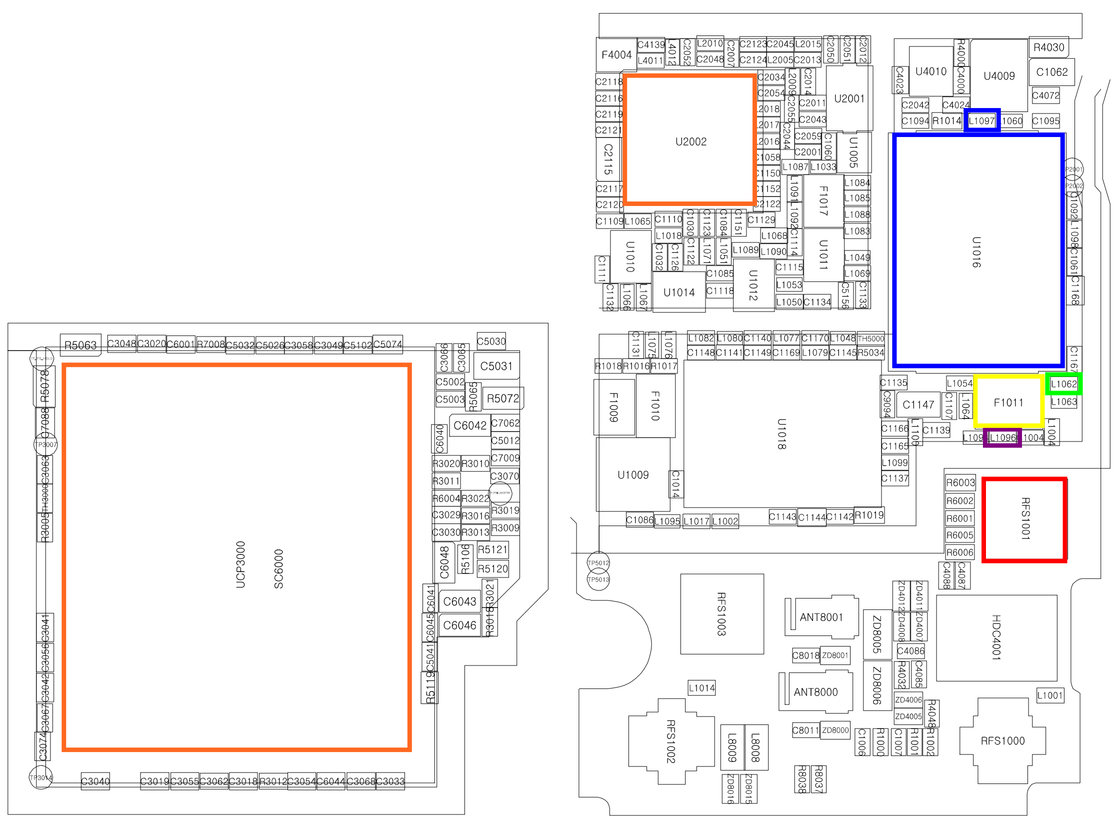

Confidential and proprietary-the contents in this service guide subject to change without prior notice.
Distribution, transmission, or infringement of any content or data from this document without Samsung's written authorization is strictly prohibited.

8-3-32. GSM1800, 1900 TX

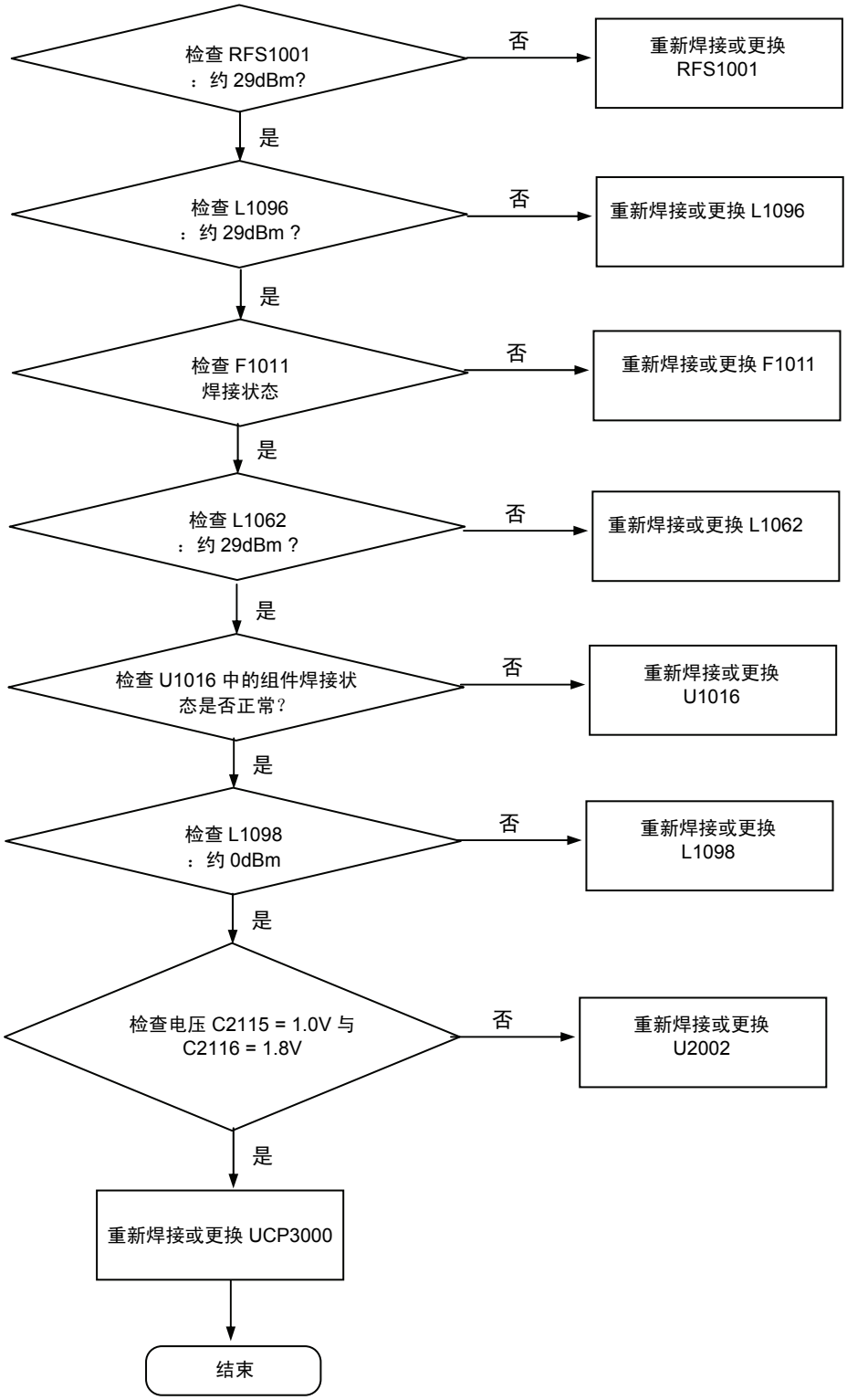

保密和所有权-本维修手册内容的变更恕不另行通知。
未经三星书面授权而发布，传送，或违背本文件中的任何内容或数据是严格禁止的。

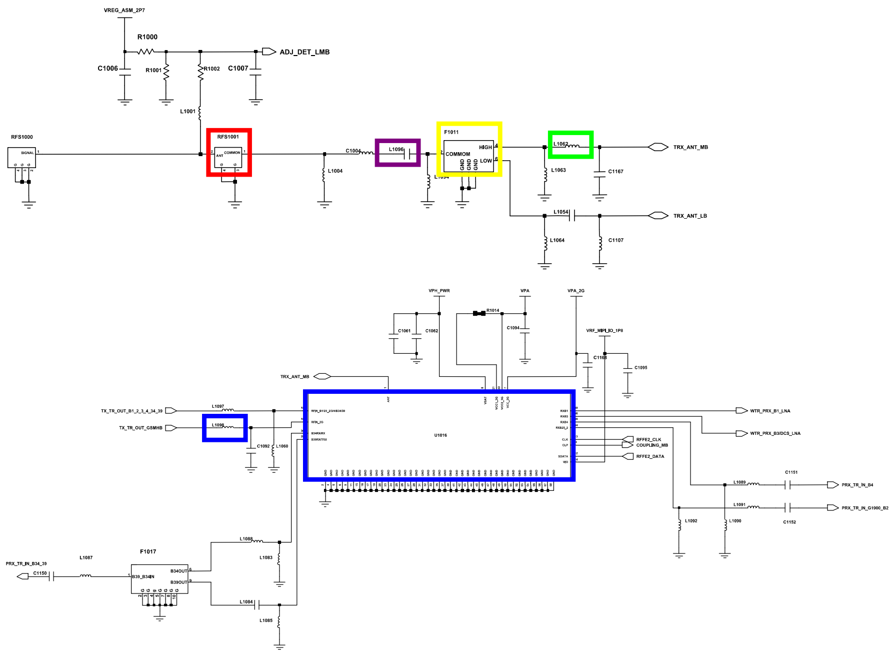

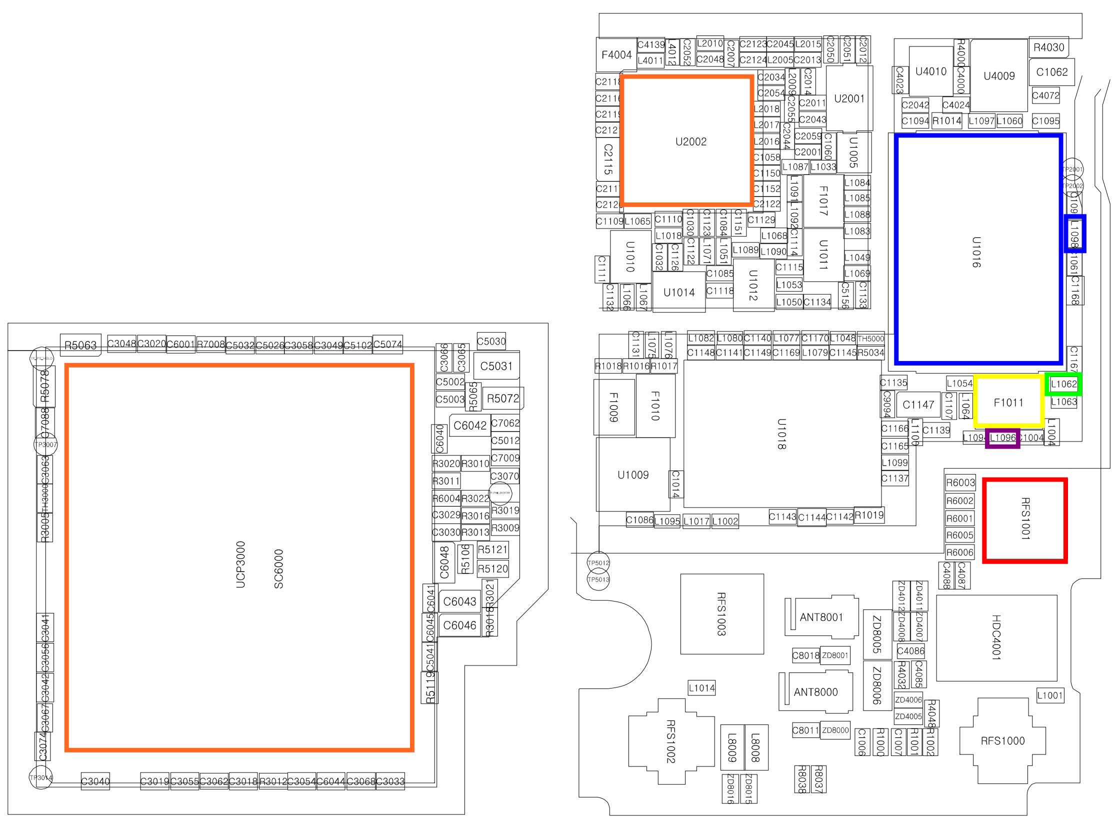

Confidential and proprietary-the contents in this service guide subject to change without prior notice.
Distribution, transmission, or infringement of any content or data from this document without Samsung's written authorization is strictly prohibited.

8-3-33. CDMA BC0 / WCDMA 5, 8 / LTE 28 TX

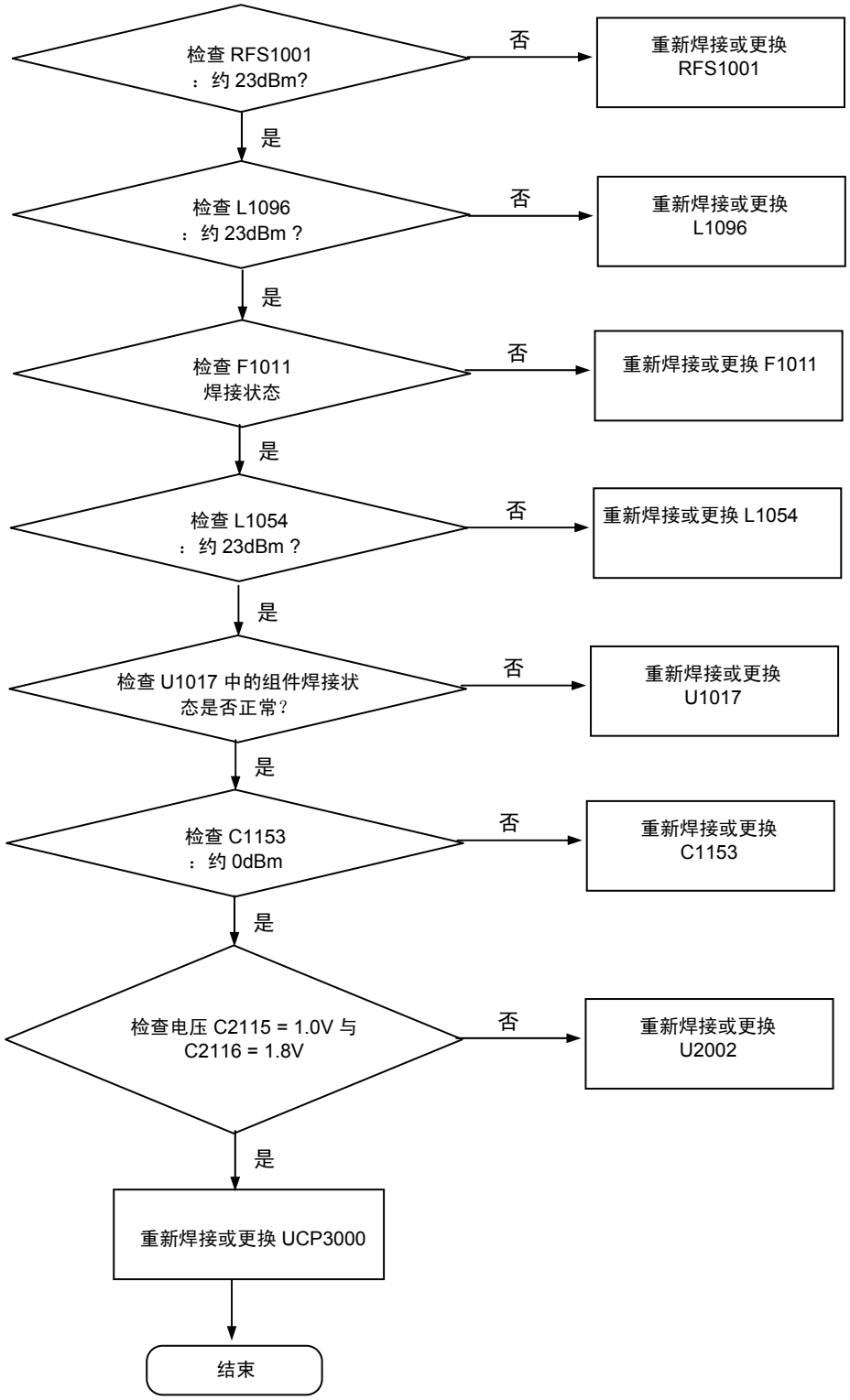

保密和所有权-本维修手册内容的变更恕不另行通知。
未经三星书面授权而发布，传送，或违背本文件中的任何内容或数据是严格禁止的。

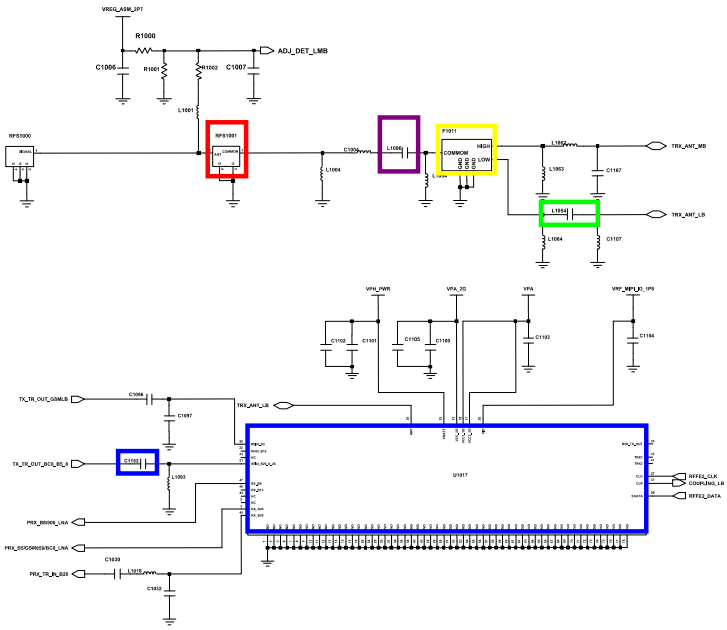

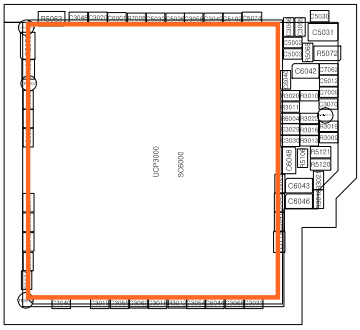

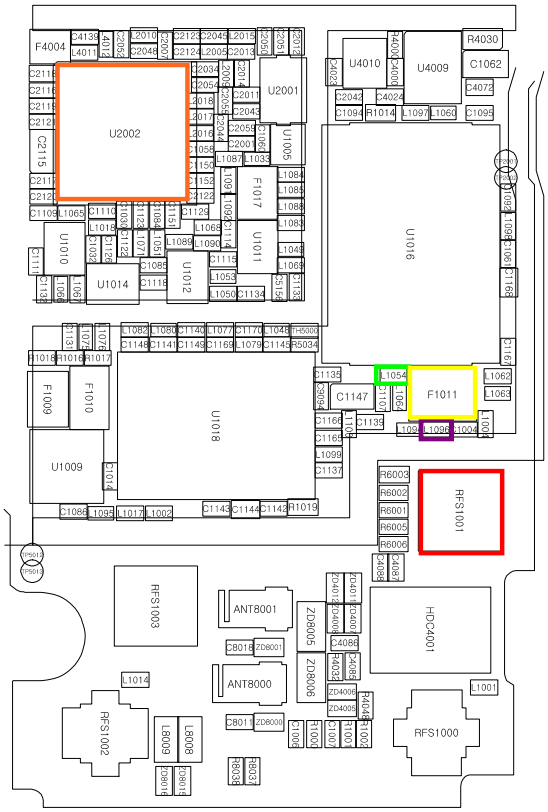

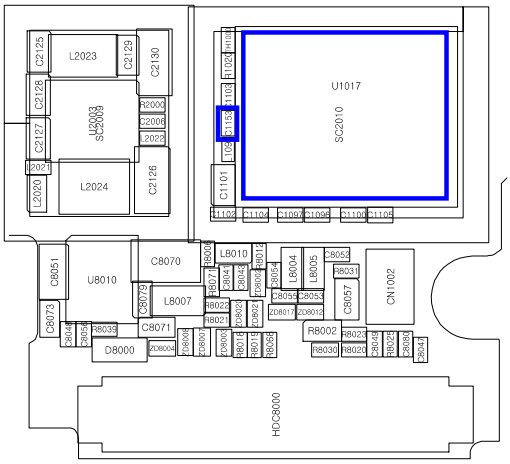

Confidential and proprietary-the contents in this service guide subject to change without prior notice.
Distribution, transmission, or infringement of any content or data from this document without Samsung's written authorization is strictly prohibited.

8-3-34. GSM850, 900 TX

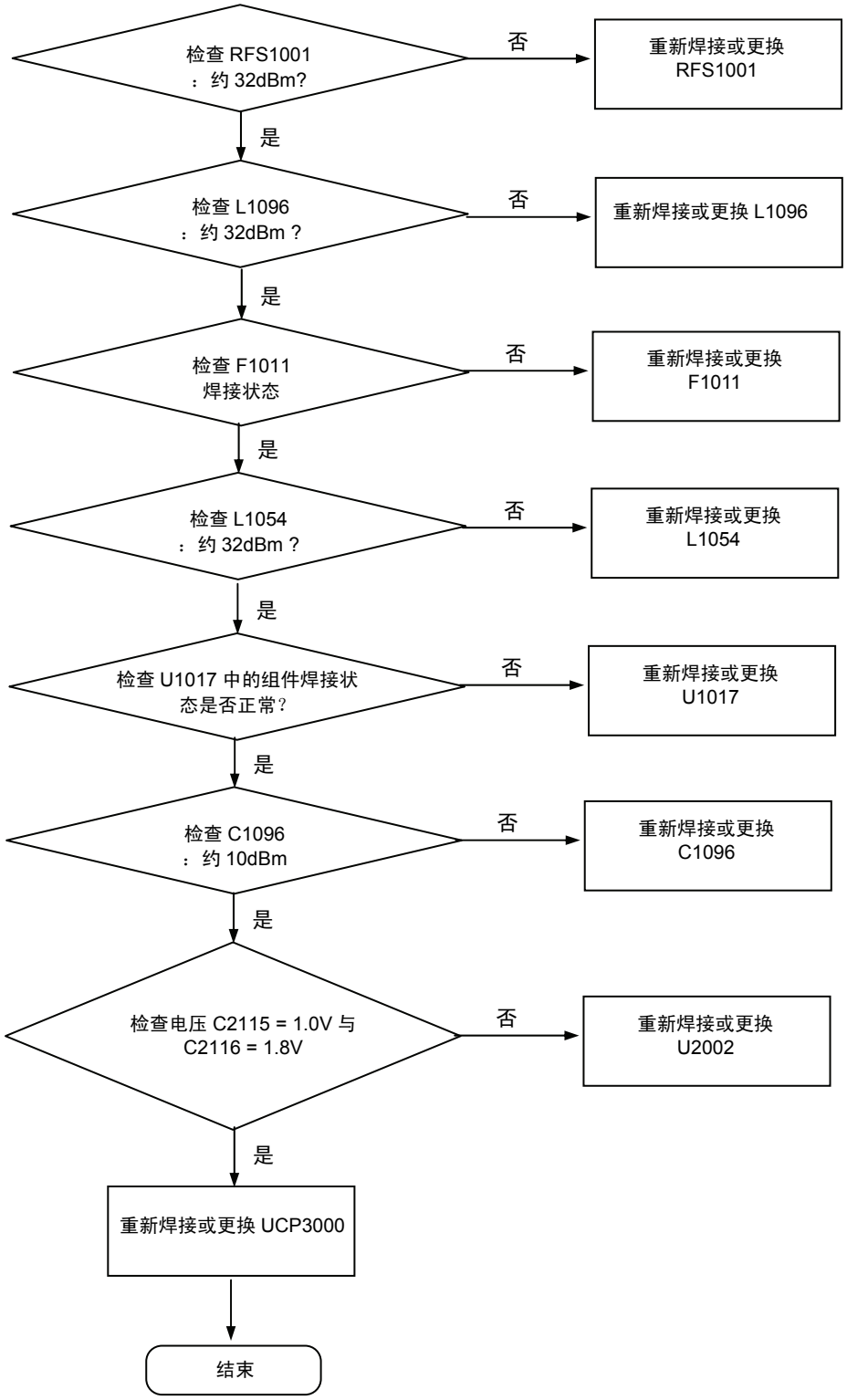

保密和所有权-本维修手册内容的变更恕不另行通知。
未经三星书面授权而发布，传送，或违背本文件中的任何内容或数据是严格禁止的。

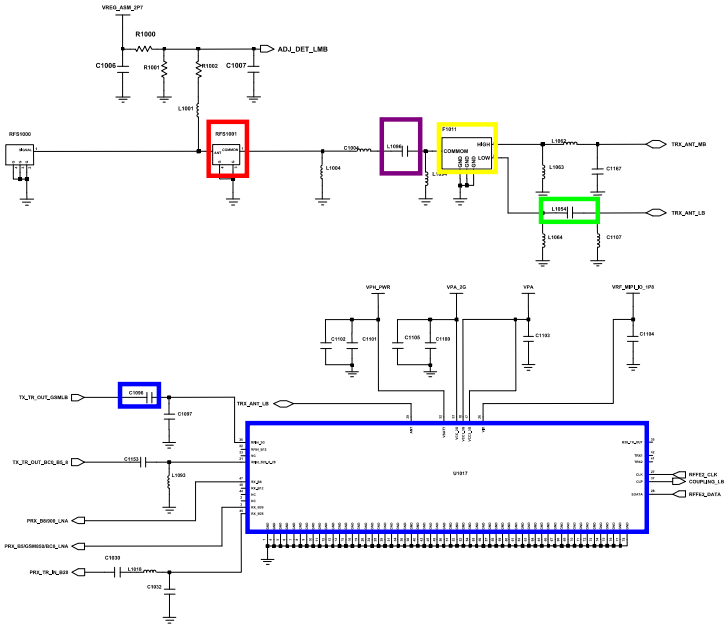

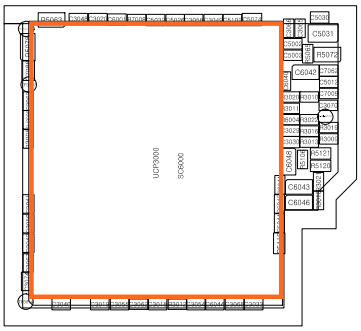

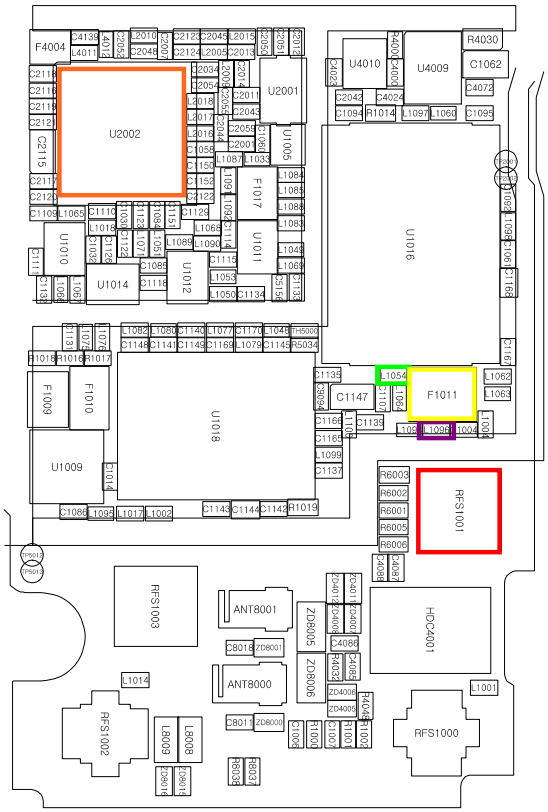

Confidential and proprietary-the contents in this service guide subject to change without prior notice.
Distribution, transmission, or infringement of any content or data from this document without Samsung's written authorization is strictly prohibited.

8-3-35. LTE 38, 40, 41 TX

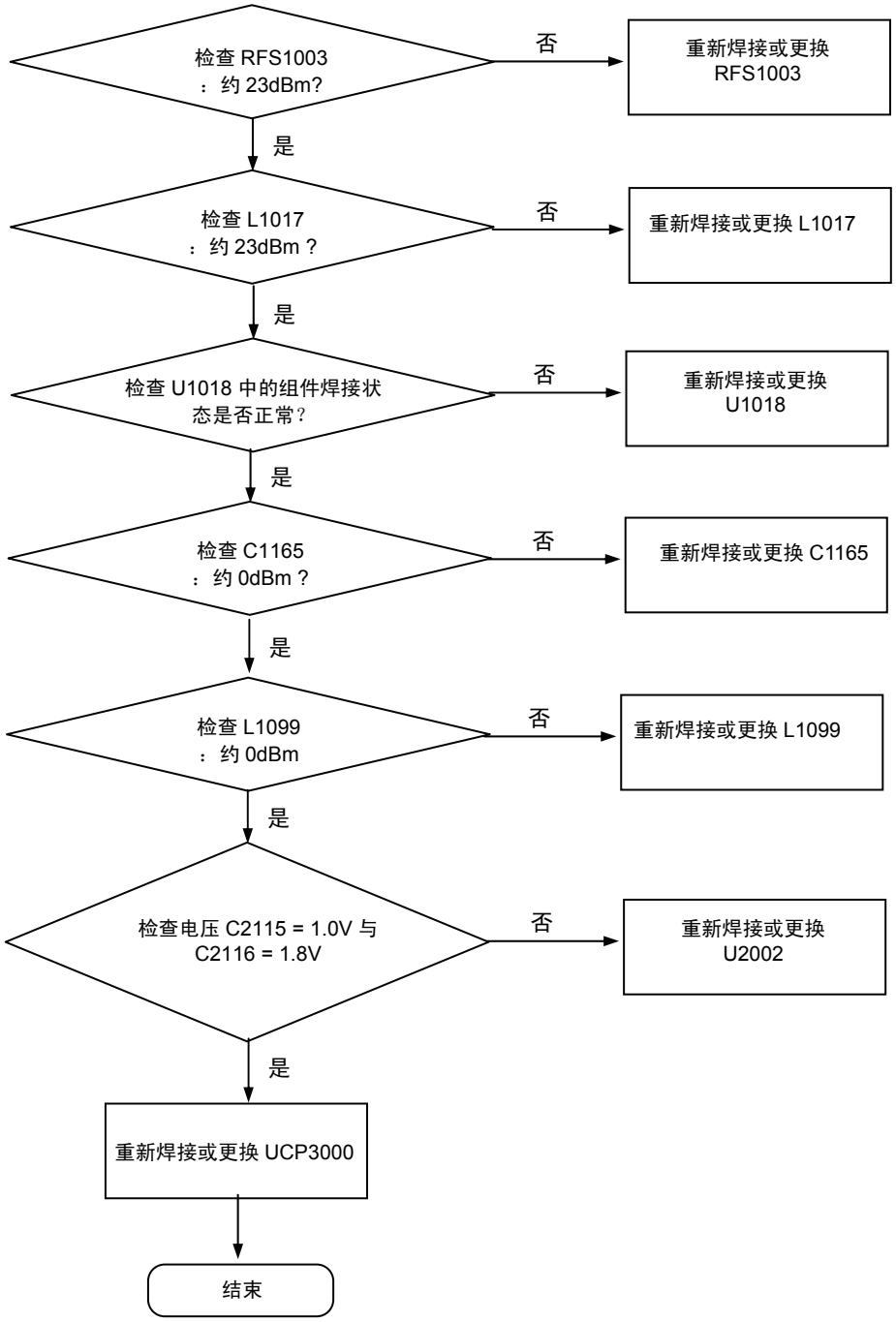

保密和所有权-本维修手册内容的变更恕不另行通知。
未经三星书面授权而发布，传送，或违背本文件中的任何内容或数据是严格禁止的。

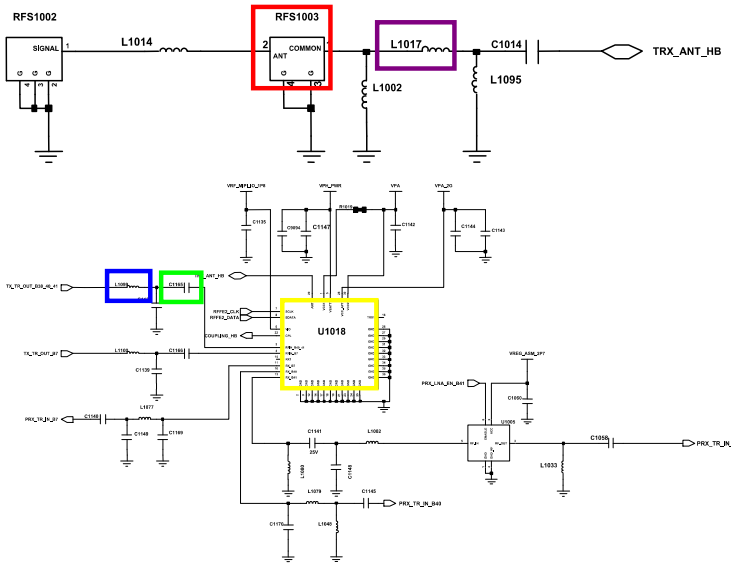

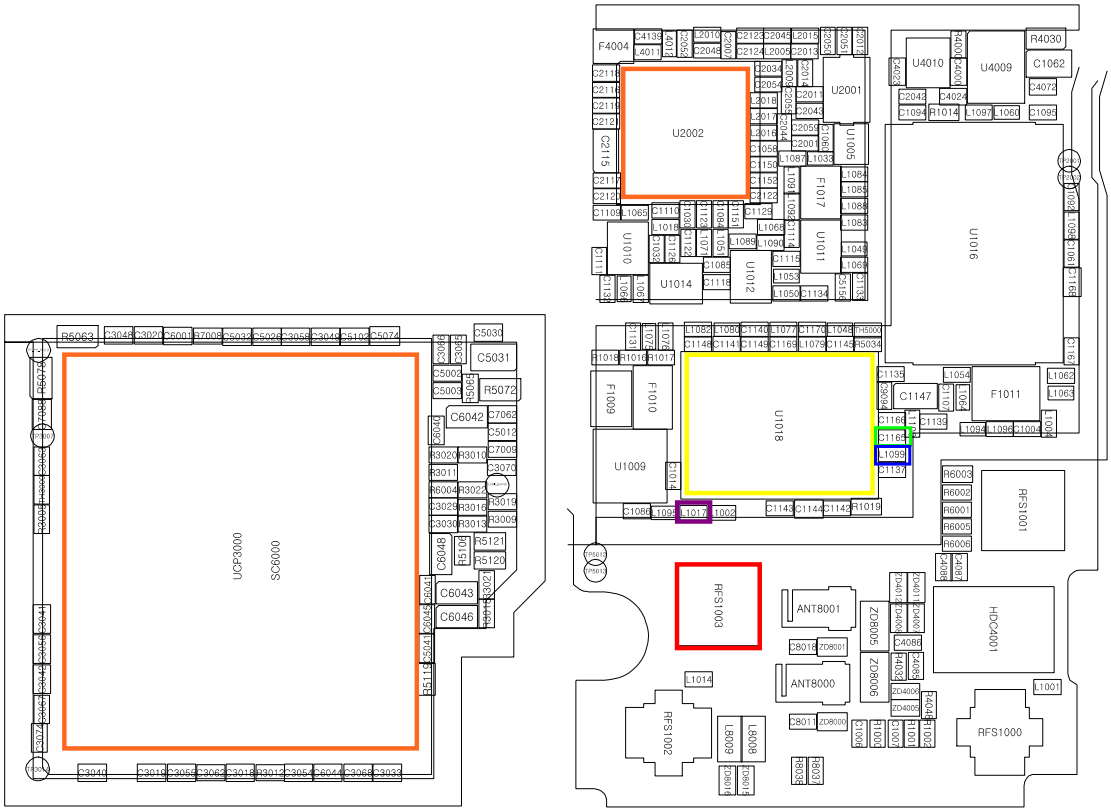

Confidential and proprietary-the contents in this service guide subject to change without prior notice.
Distribution, transmission, or infringement of any content or data from this document without Samsung's written authorization is strictly prohibited.

8-3-36. LTE 7 TX

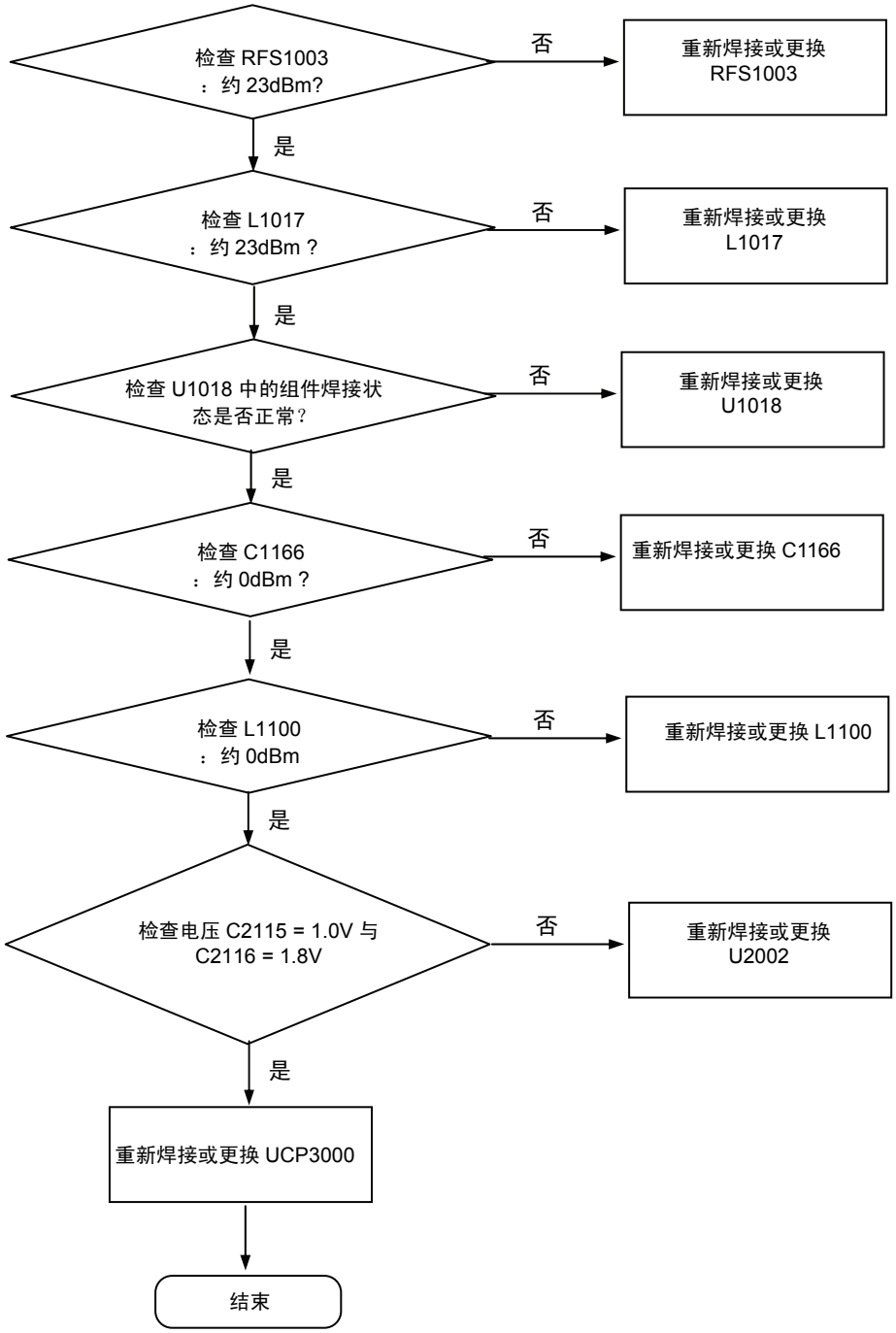

保密和所有权-本维修手册内容的变更恕不另行通知。
未经三星书面授权而发布，传送，或违背本文件中的任何内容或数据是严格禁止的。

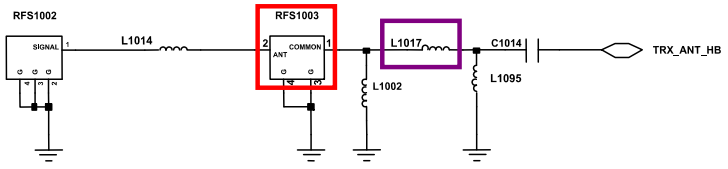

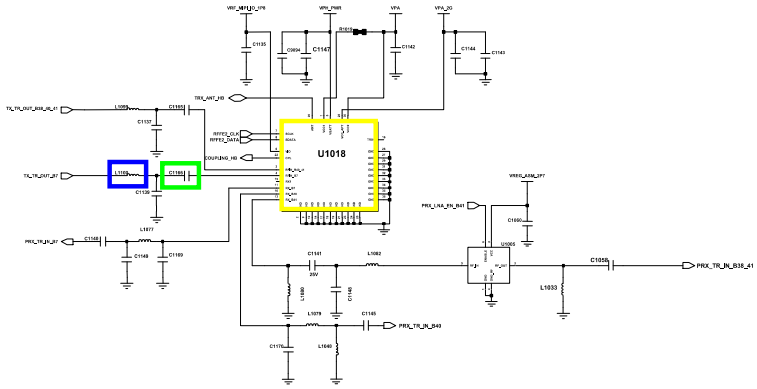

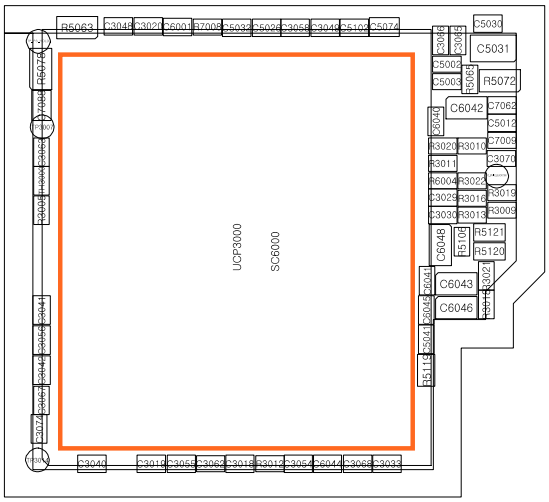

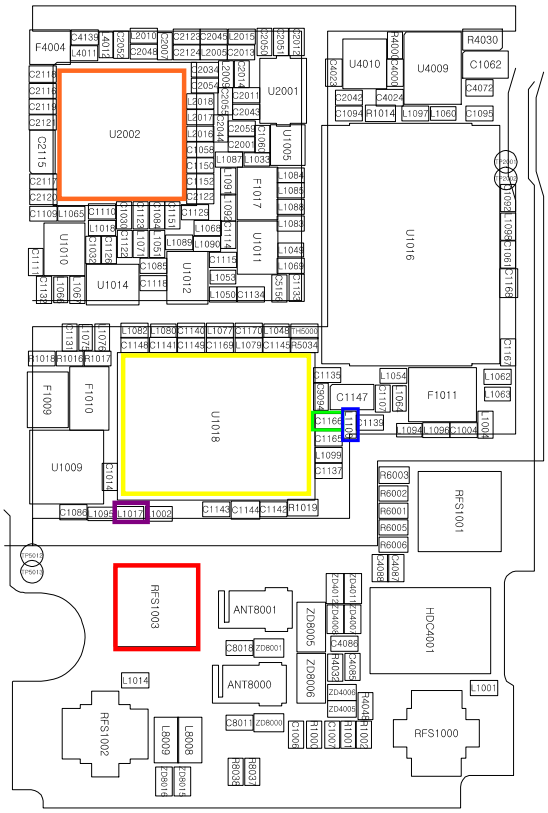

Confidential and proprietary-the contents in this service guide subject to change without prior notice.
Distribution, transmission, or infringement of any content or data from this document without Samsung's written authorization is strictly prohibited.

8-4. 维修示意图

-故障处（顶部视图）

UCP5000 (AP)

故障：AT12

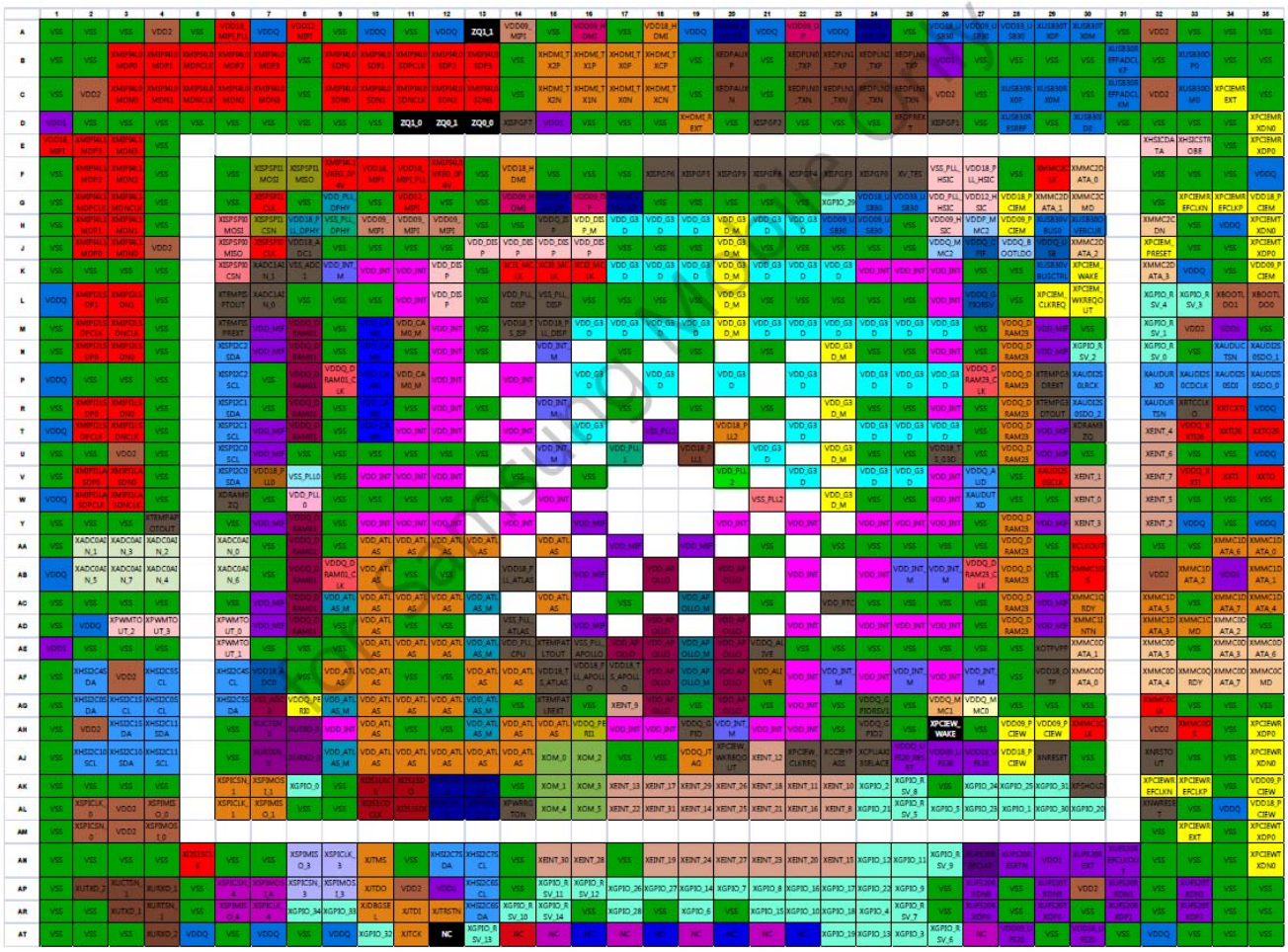

保密和所有权-本维修手册内容的变更恕不另行通知。
未经三星书面授权而发布，传送，或违背本文件中的任何内容或数据是严格禁止的。